TECHNICAL MANUAL

Installation, Operation and Maintenance Instructions

45SA

Undercounter Dishwasher

Insinger Machine Company
6245 State Road
Philadelphia, PA 19135-2996

800-344-4802
Fax: 215-624-6966
www.insingermachine.com

Insinger Model 45SA5

REVISION RECORD

Date of original manual: 1 March 1996

SN 960071 and higher.

Rev.	Date	Effective Serial No.	Description
A	1/13/97	970080	New overloads & float switches.
B	3/19/97	970179	Fig. 7-4 ball float was cantilever style.
C	4/11/97	970224	Fig. 7-1 & 7-2, new style water level indicator (item 39).
D	11/10/97	970572	Pg. 7-2 & Fig. 7-9, new contactors.
E	4/1/98	980210	Add 6.2.9, New Figs 7-1, 7-2, 7-9, 8-3, 8-4, 8-5 for new timer DE7-35 & single float switch.
F	7/15/99	990363	Rev. 6.2.1 (strainer cleaning), Fig. 7-1 & 7-2 (new S/S water level indicator).
G	4/17/00	000280	Fig. 7-2 (new PN for item 39 level indicator, SN 990363 & higher).
H	3/23/01	010149	New temp cont board DE9-251 & sensor DE9-252, Fig. 7-9
J	6/15/04	040220	New ball valves, final rinse solenoid valve, wash tank stm. sol. valve & level switch, drain overflow tube & scrap screen, captive end plugs & strainer, front panel, start push button, spring plungers on wash manifolds, hi temp limit switch for elect. tank heat.

FACTORY SUPPORT

Insinger Machine Company:
6245 State Road
Philadelphia, PA 19135
800-344-4802
215-624-4800
215-624-6966 (Fax)
www.insingermachine.com

AUTHORIZED SERVICE AGENCIES

California:
Magna Mechanical
724 Ave. B, Suite A
National City, CA 91950
619-239-8008

Florida:
Speciality Marine Supply
2057 Mayport Road
Atlantic Beach, FL 32310
904-247-3303
904-247-6403 (Fax)

The Source
589 West 14th St, Unit 5
Atlantic Beach, FL 32233
904-241-4982
904-241-4039 (Fax)

Virginia:
D. W. Boyd Company
4003 Colley Ave.
Norfolk, VA 23508
757-423-2268
757-423-1868 (Fax)

The Source
502 Rotary Street
Hampton, VA 23661
757-825-1400
757-825-1202 (Fax)

Insinger Model 45SA5

TECHNICAL MANUAL VALIDATION CERTIFICATE

To be assigned

APPROVAL AND PROCUREMENT RECORD

NOT APPLICABLE

IDENTIFYING TECHNICAL PUBLICATION SHEET

To be assigned

SAFETY SUMMARY

The following general safety notices supplement the specific warnings and cautions appearing in this manual:

All service except for routine shut-down procedures and operator's troubleshooting procedures must be performed by qualified maintenance personnel.

Prior to any work on the Model 45SA5 dishwasher involving service of electrical, steam, or water systems, the dishwasher and booster heater must be de-energized by turning the electrical supply power "Off" and closing appropriate steam and water valves.

The following is a summary of the warnings and cautions appearing in the text of this manual to alert personnel to potentially hazardous situations:

WARNINGS

Warning definition: A warning designates potential bodily harm if not followed.

Page 2-5: Do not open the door during the wash or rinse cycle because hot water is being sprayed. An interlock is provided to stop the cycle if the door is opened, but some hot water may escape.

Page 2-5: Hot water and surface temperatures exist in the machine. Allow the machine to cool to 110°F before proceeding. Wear rubber gloves.

Page 2-6: Electric float switches, probes, and heating elements must be cleaned daily. Accumulations of grease, minerals or debris will cause faulty operation of tank fill and heating systems. Use Scotch-Brite or equivalent cleaning pads on heavy dirt.

Page 4-1: Inside of the machine is hot. Allow the machine to cool to 110° F. before proceeding. Wear rubber gloves.

Page 4-3: Turn off power supply to the control enclosure. This inspection should only be done by a qualified electrician.

WARNINGS (con't)

Page 5-1: Prior to any work on the Model 45SA5 dishwasher involving service of electrical, steam, or water systems, the dishwasher and booster must be de-energized by turning the electrical supply power "Off" and closing appropriate valves.

Wear rubber gloves while performing the following steps. Do not drink, eat or smoke.

Troubleshooting of certain electrical functions requires access to live electrical circuits inside the electrical control enclosure. Troubleshooting or repair of the electrical equipment should only be done by a qualified electrician.

Page 6-1: Prior to any work on the Model 45SA5 dishwasher involving service of electrical, steam, or water systems, the dishwasher and booster must be de-energized by turning the electrical supply power "Off" and closing appropriate valves.

Wear rubber gloves while performing the following steps. Do not drink, eat or smoke.

Troubleshooting of certain electrical functions requires access to live electrical circuits inside the electrical control enclosure. Troubleshooting or repair of the electrical equipment should only be attempted by a qualified electrician.

Page 6-5: The following steps require testing with machine power on. These tests should only be made by a qualified electrician.

Page 8-1: All portions of the installation must comply with applicable Navy shipboard regulations, specifications, and requirements.

Page 8-1: Both the dishwasher and the booster heater must be securely bolted to deck plates.

Page 8-3: Dangerous voltages are present on connections to the electrical control enclosure and electric booster heater. Observe normal safety precautions for high voltage electrical equipment when connecting to the local distribution system. All work should be done by a qualified electrician.

WARNINGS (con't)

Page 8-4: At startup, and after any draining of the electric booster, turn off the 440 volt power to the booster during the initial wash tank fill (2.3.6). This will allow the booster reservoir to fill and trapped air to be purged without overheating of booster heating elements.

CAUTIONS

Caution definition: a caution designates potential equipment harm if not followed.

Page 2-1: The operator should become thoroughly familiar with the equipment and these operating instructions prior to starting the machine.

TABLE OF CONTENTS

TABLE OF CONTENTS (con't)

LIST OF TABLES

LIST OF ILLUSTRATIONS

LIST OF ILLUSTRATIONS (con't)

This page intentionally left blank.

CHAPTER 1

1.0 GENERAL INFORMATION

1.1 INTRODUCTION

This technical manual provides information for the installation, operation, inspection and maintenance of the Model 45SA5 series of dishwashers manufactured by the Insinger Machine Company, Philadelphia, PA.

1.2 SCOPE OF THE MANUAL

Chapters 1, 2, 3, and 8 provide information required for start-up, operation, and installation of the equipment. Chapters 4, 5, 6 and 7 provide information on maintenance operations.

1.3 EQUIPMENT DESCRIPTION

The Model 45SA5 dishwasher is a single tank, front loading, undercounter dishwasher used for the washing of plates, glassware, and small utensils in 16" by 16" racks. The machine processes up to 45 racks per hour through timed wash and final hot rinse cycles.

1.4 EQUIPMENT SUPPLIED

Dishwashers are supplied with wash tank and final rinse water booster heating options as follows:

Model	Wash Tank Heat	Booster Heat
45SA5-F1	Steam Coil	Steam
45SA5-F2	Electric	9 KW Electric (Hatco)
45SA5-F2C	Electric	9 KW Electric (Hubbell)
45SA5-F2D	Electric	18 KW Electric (Hatco)
45SA5-F2NM	Electric	11.4 KW Electric (Hatco)

The standard location for steam or electric booster is to the right of the dishwasher (Fig. 8-1). An optional booster location, when specified, is to the left of the dishwasher (Fig. 8-2).

In addition to the wash tank and booster heat options listed above, the 45SA5-F2NM minimizes the amount of magnetic material by using a bronze pump housing and impeller and a 300 series stainless steel booster water tank.

Each dishwasher is supplied with the following loose components, which are to be mounted adjacent to the machine by the installing activity:

Electrical control enclosure.
Thermometer bracket.
(2) Plate racks.
(2) Cup, bowl and cutlery racks.
(2) Manifold cleanout brushes.

1.5 DETERGENT AND RINSE ADDITIVE DISPENSERS

This machine must be operated with an automatic detergent feeder, including a visual means to verify that the detergents are delivered or a visual or audible alarm to signal if detergents are not available for delivery to the washing system. Please see instructions for electrical and plumbing connections located in this manual and in the feeder equipment manual.

The requirement for a detergent dispenser and a rinse additive dispenser to be supplied by the manufacturer of this dishwasher has been deleted by the Navy's Life Cycle Manager for Shipboard Food Service Equipment.

Contact your local port detergent supplier for detergent and rinse additive dispensing equipment to meet the above requirement.

Questions should be addressed to:

Naval Surface Warfare Center
Carderock Division
Ship Systems Engineering Station
Naval Business Center
5001 South Broad Street
Philadelphia, PA 19112

POC's:
James Brechka, 215-897-7311
brechkaj@nswccd.navy.mil

Janice Murphy, 215-897-1647
murphyj@nswccd.navy.mil

TABLE 1-1

DATA CHARACTERISTICS

Manufacturer:

Insinger Machine Company, Philadelphia, PA

Type:

Insinger Model 45SA5 with tank heat and booster options.

Characteristics:

Type: Single tank, front loading, undercounter dishwasher.

Wash tank capacity: 9.0 gal.

Capacity: 45 racks (16" by 16") per hour, manually loaded.

Rinse Water Requirements:

Rated flow: 4.1 gpm peak at 20 psig.
36 gal/hr average flow.

Supply temperature: 140° F. minimum.

Electrical Power Requirements:

Power supply: 440 vac, 3 phase, 60 Hz.

Operating current -	45SA5-F1:	1.4 amps	(dishwasher & booster)
	45SA5-F2:	3.1 amps	(dishwasher)
		9.9 amps	(9 KW booster)
	45SA5-F2C:	3.1 amps	(dishwasher)
		11.8 amps	(9 KW booster)
	45SA5-F2D:	3.1 amps	(dishwasher)
		19.8 amps	(18 KW booster)
	45SA5-F2NM:	3.1 amps	(dishwasher)
		12.6 amps	(11.4 KW booster)

TABLE 1-1 (con't)

DATA CHARACTERISTICS

Steam Requirements (45SA5-F1 only):

Pressure (dry saturated steam):
16 psig. minimum.
50 psig. maximum.
Pressure to booster must be regulated to 16-25 psig.

Flow Rate (tank heat plus booster):
19 lb/hr average.
94 lb/hr peak.

Component Ratings:

Wash heater: 1.5 KW
Electric booster: 9, 11.4, or 18 KW
Wash pump: 0.5 hp

Weight:

Shipping: 381 lbs.

Operating: Dishwasher - 180 lbs.
Electrical Control Panel - 30 lbs.

Volume:

Crated: 59" lg. x 40" w. x 76" h.

CHAPTER 2

2.0 OPERATION

2.1 INTRODUCTION

The Model 45SA5 dishwasher is a heavy duty machine designed for daily use in a naval shipboard environment.

CAUTION

The operator should become thoroughly familiar with the equipment and these operating instructions prior to starting the machine.

2.2 CONTROLS AND INDICATORS

TABLE 2-1

CONTROLS AND INDICATORS

ITEM #	CONTROL	TYPE	FUNCTION
1	Power Switch.	Toggle switch on control panel.	Turns control power on & off.
2	Power On.	Red pilot light on control panel.	Signals control power on.
3	Wash Cycle Switch.	Toggle switch on control panel.	Manual - will remain in continuous wash cycle for extended wash or de-liming procedure. Auto - normal operation for timed wash and rinse cycles.

TABLE 2-1 (con't)

CONTROLS AND INDICATORS

4	Start Pushbutton.	Black start button on left side of door.	Starts wash and rinse cycle operation.
5	Wash Indicator.	White pilot light on control panel.	Signals wash cycle operation.
6	Rinse Indicator.	Amber pilot light on control panel.	Signals rinse cycle operation.
7	5-Amp Circuit Breaker.	Circuit breaker located on control panel.	Over-current protection for control circuit.
8	Thermometers - wash & final rinse.	Gauges located on remote bracket.	Indicate water temperature of wash tank and final rinse water.
9	Pressure gauge - final rinse.	Dial gauge located by booster heater.	Indicates final rinse pressure.
10	Low water level switch.	Float switch located in wash tank.	Disables elect. power to wash tank heating element or steam to wash tank heating coil.
11	High water temperature limit switch.	Thermostat on wash tank electric heater.	Disables wash tank electric heating element.
12	Ball valves - steam & water.	Valve located on respective piping string.	Open or close respective incoming steam or water line.

TABLE 2-1 (con't)

CONTROLS AND INDICATORS

13	Temperature control - wash and rinse.	Round slotted adjustment knob located on the wash or rinse tank temperature control board in the control panel.	Regulates temperature of the wash and rinse tank water.
14	Final rinse temperature control (electric booster).	Slotted adjustment screw located inside the lower front of the booster.	Controls temperature of final rinse water.
15	Final rinse high temperature limit switch (electric booster).	Manual reset thermostat located inside the lower front of the booster.	Disables booster heating elements.
16	Final rinse temperature control (steam booster).	Left slotted adjustment screw inside the round dual thermostat on front of steam booster.	Controls temperature of final rinse water.
17	Final rinse low temperature cutoff switch (steam booster).	Right slotted adjustment screw inside the round dual thermostat on front of steam booster.	Disables pump when water is below 180° F.

2.3 START-UP PROCEDURE

2.3.1 Before starting the machine, inspect the inside and make sure that:

1. The suction strainer is in place over the pump intake.
2. The scrap screens are clean and in place.
3. The upper and lower wash manifolds are securely installed.
4. The plastic plugs at the ends of all manifolds are installed and hand tight.
5. The drain overflow tube is in place.

2.3.2 Check that the hot water supply valve is open and electric power services are on. On steam heated machines, check that the wash tank and booster steam supply ball valves are open.

2.3.3 Fill the detergent dispenser reservoir in accordance with the detergent supplier's recommendations. Only flake, beaded, or pelletized detergents should be used.

2.3.4 Connect the rinse injector supply line to a source of rinse water conditioner.

NOTE

Any toggle switches on the detergent dispenser and rinse injector should be permanently left in the "On" position unless service is required on the devices.

2.3.5 On the electrical control enclosure, move the Wash Cycle Switch to the "Auto" position. Move the Power Switch to the "On" position. The red "Power On" light will illuminate.

2.3.6 Close the machine door. Machine will automatically fill to the operating level.

2.3.7 When the wash tank reaches operating level, the thermostatically controlled tank heat will be activated. Allow the tank temperature to reach 156° F. before washing.

NOTE

The wash pump will not start if the water in the rinse booster is below 180° F. Allow time for the water to reach this temperature.

WARNING

Do not open the door during the wash or rinse cycle because hot water is being sprayed. An interlock is provided to stop the cycle if the door is opened, but some hot water may escape.

2.3.8 Open the door, insert a rack of soiled dishware, and close the door. Press the Start pushbutton. The machine will automatically cycle through a timed wash and rinse sequence. During the wash cycle, the white "Wash" light will come on. During the rinse cycle, the amber "Rinse" light will come on. At the end of the rinse cycle, the amber "Rinse" light will go off. Open the door, unload the rack of clean dishware, and repeat the cycle.

NOTE

Overloading racks will impede the proper cleaning of dishware.

2.4 SHUT-DOWN PROCEDURE

2.4.1 The machine should be cleaned at the end of each meal service.

2.4.2 Turn the Power Switch to the "Off" position.

2.4.3 Drain the wash tank:

WARNING

Hot water and surface temperatures exist in the machine. Allow the machine to cool to 110° F before proceeding. Wear rubber gloves.

Remove the drain overflow tube and allow the wash tank to drain completely.

2.4.4 After draining:
Remove the lower wash manifold.
Rotate the lower rinse manifold to the vertical position.
Remove the scrap trays and scrap tray spacers.
Remove the upper wash manifold.
Remove the pump suction strainer and place on tank bottom.

2.4.5 Remove the end plugs from the wash manifolds and clean with the provided brush. Flush after cleaning and replace plugs.

2.4.6 Clean and flush the scrap trays and tray spacers, the pump suction strainer, and the drain overflow tube.

2.4.7 Clean and flush the entire inside of the wash tank, wash and rinse chamber, and door. Wipe the inside of the drain overflow tube fitting. Pay special attention to moving float switches (Fig. 6-10), detergent dispenser probes, electric heater elements (Fig. 6-2), and wash tank steam coil.

WARNING

Electric float switches, probes and heating elements must be cleaned daily. Accumulations of grease, minerals or debris will cause faulty operation of tank fill and heating systems. Use Scotch-Brite or equivalent cleaning pads on heavy dirt.

2.4.8 Use a small wire or pin to clean mineral accumulations from the rinse nozzles.

2.4.9 Replace all removed parts in reverse order.

2.4.10 Door should remain open to allow interior surfaces to dry.

CHAPTER 3

FUNCTIONAL DESCRIPTION

The 45SA5 dishwasher consists of a wash tank and integral wash and rinse chamber with a front access door. A detergent solution in the wash tank is heated to a nominal 156° F. operating temperature by either a submerged steam coil (45SA5-F1 series) or an electric immersion heater (45SA5-F2 series).

During the wash cycle, a centrifugal pump draws the hot detergent solution through a suction strainer and then forces the solution under pressure to the upper and lower wash manifolds, where the solution exits through slots and impacts against the dishware in the rack. The spent wash solution returns to the wash tank through the scrap trays, where debris from the dishware is captured for later disposal.

The detergent strength is maintained by a concentration sensing controller and detergent supply reservoir.

A hot fresh final rinse cycle follows the wash cycle. The incoming fresh water supply is first reduced to 20 psig. by a pressure reducing valve and then heated to 180° F. (minimum) by either a steam powered heat exchanger (45SA5-F1 series) or an electrically powered booster heater (45SA5-F2 series), located adjacent to the dishwasher. The hot rinse water enters the wash and rinse chamber through upper and lower rinse manifolds, and exits through rinse nozzles and impacts against the dishware in the rack. The spent rinse water returns to the wash tank through the scrap screens.

Both the steam and electric powered boosters have a low water temperature interlock that prevents or interrupts washing when the water in the booster is below 180° F.

The residual heat in the rinse water helps to maintain wash tank temperature. The additional volume of rinse water, when added to the wash tank, increases the solution level and then overflows into the drain, carrying away any floating grease and debris.

A feed pump injects a conditioner into the hot rinse water during the rinse cycle. This conditioner improves the rinsing and drying of the dishware by promoting a "sheeting" action of the rinse water.

Insinger Model 45SA5

A remote electrical control enclosure contains a magnetic contactor, overload protection for the pump motor, control relays, wash and rinse cycle timers, selector switches, and pilot lights.

CHAPTER 4

SCHEDULED MAINTENANCE

4.1 INTRODUCTION

The 45SA5 dishwasher is a rugged and simple machine. The scheduled maintenance described in this chapter is mostly a periodic set of inspections and cleaning.

4.2 WEEKLY REQUIREMENTS FOR INSPECTION AND MAINTENANCE

4.2.1 Inspect for external leakage.

Inspect the outside of the machine, including all piping, piping components, and rinse water boosters, for leakage. Tighten or repair as necessary.

4.2.2 Inspection of detergent probe and moving float switch.

Turn the Power Switch to the "Off" position. Drain the wash tank.

WARNING

Inside of the machine is hot. Allow the machine to cool to 110° F. before proceeding. Wear rubber gloves.

After draining, manually move the float switch to verify that there is no binding or sticking. Check the detergent probe for dirt and mineral accumulation. Clean as required.

4.2.3 De-liming.

Accumulated mineral deposits must be removed from the inside surfaces of the machine on a periodic basis. The frequency of de-liming depends on the hardness of the water, the type and concentration of detergents used, and the amount of washing time. Until the proper frequency can be determined, de-lime on a weekly schedule.

Follow the instructions supplied with the de-liming chemicals. To provide the continuous wash cycle required for de-liming, turn the Wash Cycle toggle switch on the control enclosure to the "Manual" position. This setting bypasses the wash cycle timer and rinse cycle.

4.3 QUARTERLY REQUIREMENTS FOR INSPECTION AND MAINTENANCE

4.3.1 Check and adjust final rinse pressure.

4.3.1.1 The final hot rinse pressure must be 20 psig. while the rinse water is flowing. Adjust the pressure reducing valve during a rinse cycle (CW to increase, CCW to decrease pressure).

4.3.1.2 If the supply pressure to the booster is 20 psig. or greater, and the rinse pressure is below 20 psig and can not be increased, the strainer in the pressure reducing valve may be clogged. Clean the strainer per 6.2.1.

4.3.2 Clean steam strainers (45SA5-F1 only).

4.3.2.1 Close the manual valves on the wash tank heat and booster steam supplies.

4.3.2.2 Remove the plug and strainer basket from each "Y" type steam strainer and flush clean.

4.3.2.3 Replace strainer and plug.

4.3.2.4 Open steam supply valves.

4.3.3 Inspect condensate traps (45SA5-F1 only).

4.3.3.1 Condensate traps are located below the steam booster and below the wash tank.

4.3.3.2 Check to see that each trap is operating correctly, allowing condensate to flow when the supply valve is open. A condensate trap that is stuck shut, possibly due to corrosion, will not allow the condensate to flow, and no heat will be released within the booster or tank. A trap that is stuck open will not allow the heated unit to reach full operating temperature. A faulty trap should be replaced.

4.3.4 Inspect inside of control enclosure.

WARNING

Turn off power supply to the control enclosure. This inspection should only be done by a qualified electrician.

4.3.4.1 Open the cover of the control enclosure.

4.3.4.2 Inspect electrical and mechanical fasteners and tighten loose connections.

4.3.4.3 Inspect overload assembly for proper setting.

4.3.4.4 Inspect indicating lights; replace any cracked lenses or burned out bulbs.

4.3.4.5 Close and secure control enclosure cover.

This page intentionally left blank

CHAPTER 5

TROUBLESHOOTING

This chapter contains information to assist the operator and/or maintenance personnel in troubleshooting abnormal operation. Personnel involved must be familiar with the description of the equipment and the functioning of all components, as described in Chapter 3.

The following tables list the more common symptoms which may be experienced, their causes, and the recommended corrective action. The tables are separated into operator and maintenance actions.

WARNING

Prior to any work on the Model 45SA5 dishwasher involving service of electrical, steam, or water systems, the dishwasher and booster must be de-energized by turning the electrical supply power "Off" and closing appropriate valves.

Wear rubber gloves while performing the following steps. Do not drink, eat or smoke.

Troubleshooting of certain electrical functions requires access to live electrical circuits inside the electrical control enclosure. Troubleshooting or repair of the electrical equipment should only be done by a qualified electrician.

TABLE 5-1

OPERATOR'S TROUBLESHOOTING GUIDE

NOTE

This section covers actions that can be performed by the operator, without the use of tools.

SYMPTOM OF TROUBLE	POSSIBLE CAUSE	SOLUTION
1. Machine will not operate.	a. No power.	a. Move POWER switch to ON.
2. Tank will not hold water.	a. Drain overflow tube not installed. b. Pump petcock opened.	a. Install drain overflow tube. b. Close pump petcock.
3. Tank fills beyond overflow level.	a. Obstruction in drain overflow tube. b. Clogged drain line.	a. Remove obstruction. b. Remove drain overflow tube. (water is HOT!), if water does not drain, maintenance must "snake" drain line.
4. Water leaks from around door.	a. Door is not seated. b. Clogged spray pipes.	a. Check for proper seating. b. Clean with brush provided.

TABLE 5-1 (con't)

OPERATOR'S TROUBLESHOOTING GUIDE

5. Weak or ineffective wash spray.	a. Clogged spray pipes. b. Manifolds not installed properly. c. Suction strainer clogged.	a. Clean with brush provided. b. Ensure proper placement of upper and lower manifolds. c. Clean suction strainer.
6. Weak or ineffective final rinse spray.	a. Lime deposit on spray nozzles. b. Low water pressure. c. Closed supply valve.	a. Clean nozzles. b. Should be 20 PSI flowing. c. Open valve.

TABLE 5-2

MAINTENANCE TROUBLESHOOTING GUIDE

NOTE

This section covers actions that should be performed by qualified maintenance personnel.

SYMPTOM OF TROUBLE	POSSIBLE CAUSE	SOLUTION
1. Machine will not operate.	a. No power. b. Blown fuse/ breaker. c. Power shut off at disconnect switch. d. Motor overload protection tripped.	a. Check power supply. b. Replace fuse; reset breaker and troubleshoot source of problem. c. Move disconnect switch to ON. d. Reset overload. If motor overload trips repeatedly, check overload setting and motor current.
2. Tank will not hold water.	a. Drain overflow tube not installed. b. Pump petcock open.	a. Install drain overflow tube. b. Close pump petcock.
3. Tank fills beyond overflow level.	a. Obstruction in drain overflow tube. b. Clogged drain line.	a. Remove obstruction. b. Remove drain overflow tube. (water is HOT!), if water does not drain, clean the drain line with a "snake".

TABLE 5-2 (con't)

MAINTENANCE TROUBLESHOOTING GUIDE

4. Water leaks from around door.	a. Door is not seated. b. Clogged spray pipes.	a. Check for proper seating and repair as necessary. b. Clean with brush provided.
5. Weak or ineffective wash spray.	a. Clogged spray pipes. b. Manifolds not installed properly. c. Suction strainer clogged. d. Pump motor running in the wrong direction. e. Pump impeller worn.	a. Clean with brush provided. b. Ensure proper placement of upper and lower spray pipes. c. Clean suction strainer. d. Correct electrically, proper pump direction indicated by arrow on pump housing. e. Replace pump impeller.
6. Weak or ineffective final rinse spray.	a. Lime deposit on spray nozzles. b. Closed supply valve. c. Low water pressure. d. Final rinse nozzles worn.	a. Clean nozzles. b. Open valve. c. Adjust to 20 PSI flowing. d. Replace final rinse nozzles.

TABLE 5-2 (con't)

MAINTENANCE TROUBLESHOOTING GUIDE

7. Final rinse spray will not turn off.	a. Clogged final rinse solenoid valve. b. Worn disc and seat in final rinse solenoid valve.	a. Turn off water supply, disassemble valve & clean internal parts of lime & scale. b. Turn off water supply, disassemble valve and replace with repair kit.
8. Water hammer.	a. Excessive line pressure.	a. Install shock arresters.
9. Machine vibrates (See also Water hammer, #8).	a. Worn motor bearing. b. Reversed pump rotation.	a. Replace motor. b. Correct electrically, proper pump direction indicated by arrow on pump housing.
10. Tank and/or booster will not hold specified temperature.	a. No power. b. Thermostat not adjusted or defective. c. Heat circuitry not working. d. Temperature gauge inaccurate/defective.	a. Check power supply b. Adjust or replace thermostat. c. Troubleshoot heat circuitry using wiring diagram provided in this manual. d. Replace temperature gauge.

TABLE 5-2 (con't)

MAINTENANCE TROUBLESHOOTING GUIDE

10. (continued) Tank and/or booster will not hold specified temperature.	*For Electric Heat:* e. Power turned off. f. Immersion heaters limed or defective. g. Level float switch stuck in down position. *For Steam Heat* h. Steam turned off. i. Not enough steam. j. Level float switch stuck in down position. k. Steam solenoid clogged. l. Worn solenoid piston and seat. m. Steam condensate trap clogged. n. Clogged line strainer.	e. Turn power on. f. De-lime or replace immersion heater. g. Clean or replace float switch. h. Turn steam supply on. i. Adjust steam pressure per machine specs. j. Clean or replace float switch. k. Turn off steam supply, disassem-valve and clean internal parts. l. Turn off steam supply. Replace valve. m. Turn off steam supply: disassemble steam trap and clean, repair or replace. n. Turn off steam supply and clean strainer.
11. Tank not filling/tank heat coming on with no water in tank.	a. Level float dirty or defective. b. Level control system not working.	a. Clean or replace level float. b. Troubleshoot level control circuitry using wiring diagram provided in this manual.

This page intentionally left blank

CHAPTER 6.0

CORRECTIVE MAINTENANCE

6.1 INTRODUCTION

This chapter contains instructions for maintenance and replacement of components that can be damaged or fail in normal operation.

6.2 MAINTENANCE AND REPAIR PROCEDURES

WARNING

Prior to any work on the Model 45SA5 dishwasher involving service of electrical, steam, or water systems, the dishwasher and booster must be de-energized by turning the electrical supply power "Off" and closing appropriate valves.

Wear rubber gloves while performing the following steps. Do not drink, eat or smoke.

Troubleshooting of certain electrical functions requires access to live electrical circuits inside the electrical control enclosure. Troubleshooting or repair of the electrical equipment should only be attempted by a qualified electrician.

6.2.1 Clean fresh hot rinse strainer.

6.2.1.1 Close the rinse water shut-off valve:
Steam booster: Figure 7-5, item 16 (next to PRV).
Electric booster: Figure 7-7 or 7-8, item 2.

6.2.1.2 The strainer is located within the pressure reducing valve. See Figure 6-1. Loosen the large hex nut on the bottom of the valve. Remove the nut with the attached strainer assembly. It is not necessary to remove the strainer screen from the assembly.

6.2.1.3 Clean the strainer screen and flush with water or a blast of compressed air.

6.2.1.4 Replace strainer assembly and tighten the large hex nut.

6.2.1.5 Open the rinse water shut-off valve.

6.2.1.6 Operate the machine through a cycle. During the rinse phase, adjust the rinse water pressure to 20 psig.

6.2.2 Removal and replacement of electric tank heater. See Figure 6-2.

6.2.2.1 Turn off dishwasher power at the main disconnect switch.

6.2.2.2 Drain the wash tank per 2.4.3.

6.2.2.3 Remove the external heater cover and disconnect the three power wires. Save the paper insulating strip. Disconnect the electrical conduit.

6.2.2.4 On the inside of the wash tank, remove the 2 hose clamps that hold the high temperature limit switch capillary to the heater element and move the capillary to the side. Loosen and remove the large brass hex nut from the heater body and withdraw the heater from the tank.

6.2.2.5 Clean the tank hole and install a new heater, brass washer, and gasket in the tank hole. Use plumber's putty between the large brass hex nut and the inside of the tank. Install and tighten the large brass nut from the inside of the tank. Clamp the capillary to the UPPERMOST heater element.

6.2.2.6 Reconnect the power wires and conduit and replace the paper insulating strip and heater cover.

6.2.3 Removal and replacement of thermometers.

6.2.3.1 If a thermometer is suspected of being defective, first check the unit against a reference thermometer and compare readings. Tolerance is plus or minus 2° F.

6.2.3.2 To remove the wash thermometer, first turn the Power Switch on the electrical control enclosure to the "Off" position. Drain the wash tank per 2.4.3. Tank does not need to be drained to replace the rinse thermometer.

1. At the rear of the dishwasher, loosen the split hex nut that holds the capillary bulb in the rinse line fitting or the wash tank wall. Withdraw the bulb.

2. Remove the thermometer mounting bracket and remove the outer hex nut from the stem of the thermometer. Withdraw the capillary and bulb through the hole in the bracket.

3. Install a new thermometer in the bracket. Pass the capillary and bulb through the hole in the bracket, and install and tighten the hex nut on the stem of the thermometer. Replace the thermometer bracket.

4. Clean the inside of the bulb fitting on the rear of the dishwasher. Install the bulb and tighten the split hex nut.

6.2.4 Overload relay settings and functions. See Figure 6-3.

6.2.4.1. Overload current setting. Lift the plastic cover. With a small screwdriver, align the set point on the overload setting dial with the value for the motor nameplate full load current for 440 volts. The nominal full load current for 440 volt operation of a typical 1/2 hp. motor is 1.2 amps.

6.2.4.2 Auto reset selection. The overload relay is factory installed in the auto reset configuration. A blue shutter appears in the reset selector window. Always use this configuration. If set to the manual reset function (which may be the case with a replacement part), a white plastic cover with an "H" covers the reset selector window. To change to auto reset, lift the plastic cover. Use a small screwdriver to pry off and discard the "H" cover. Slide the blue shutter downward until a faint "click" is heard.

6.2.4.3 Reset test. To test the overload trip function, press the red Stop button. The NC auxiliary contact (only) will open as long as the Stop button is pressed in. This contact is wired in series with the pump contactor M1 and, when opened, will stop the pump motor.

6.2.5 Adjust wash tank temperature.

6.2.5.1 The wash tank temperature should be 156° to 160° F.

6.2.5.2 Tank temperature is sensed by a thermistor on the tank wall and regulated by a temperature control board in the electrical control enclosure. See Figure 6-4. Locate the tan adjustment pot with slot on the wash tank temperature control board. Rotate in small increments (CW to increase, CCW to decrease temperature) and allow tank temperature to stabilize between adjustments.

To replace the tank heat temperature control board or thermistor, disconnect and tag all wires, and then remove the board or thermistor.

6.2.6 Adjust rinse booster temperature.

6.2.6.1 The booster water outlet temperature should be 190° to 195° F.

6.2.6.2 Steam heated booster. The temperature controller is on the front of the booster. Unscrew the round cover. See Fig. 6-5. The water outlet temperature control switch is on the left, marked "Temp Set 190° F." Use a hex key to rotate the pointer and change the setting. Higher scale settings correspond to higher outlet temperatures. While the rinse is operating, turn the pointer in 1/2 scale increments and observe the rinse temperature over several rinse cycles.

The switch on the right is the low water temperature interlock switch, factory set at 180° F.

To remove this thermostat, first close the manual hot water valve. Disconnect and tag all wires. Remove the electrical conduit from the thermostat housing. Unscrew the entire thermostat assembly from the pipe tee on the booster.

6.2.6.3 Electrically heated booster.

1. Hatco 9, 11.4, and 18 KW models: The thermostat is located inside the lower front of the booster. Remove the access plate marked "Remove for access to thermostats and high limit switch". See Figure 6-6. Rotate the slotted screw "G" in small increments CCW to lower temperature. Rotate nut "F" CCW, while holding "G" against high stop, to raise temperature. Allow tank temperature to stabilize between adjustments. Note that 1/6 turn is approximately 12° F. Observe the rinse temperature over several rinse cycles.

3. Hubbell 9 KW models: The thermostat is located inside the booster. Remove the main cover plate. The thermostat is on the center left of the booster. Rotate the slotted screw in the center of the marked dial on the thermostat cover in small increments (CW to increase, CCW to decrease temperature) and allow tank temperature to stabilize between adjustments. Observe the rinse temperature over several rinse cycles.

6.2.7 Inspection and repair of solenoid actuated valves.

6.2.7.1 Solenoid valves are used on the machine for controlling steam to the booster and wash tank heaters (steam heated machines) and the flow of final hot rinse water. If the valve in question will not close, or will not open, inspect the valve.

6.2.7.2 Preliminary electrical check.

Warning

The following steps require testing with machine power on. These tests should only be made by a qualified electrician.

1. A solenoid valve is opened by a mechanical plunger which is lifted when voltage is applied to the valve coil. Make sure there is voltage to the coil. If the solenoid valve will not open and there is no voltage at the coil, the problem is somewhere in the solenoid control circuit (thermostat, wires, or ON/OFF switch).

2. If the valve will not open and there is correct voltage to the coil, disconnect all power to machine and remove the coil. Visually check for signs of heat discoloration or carbon deposit due to a short circuit in the coil. Check the coil winding with a meter for electrical continuity. No continuity means an open coil and it must be replaced.

6.2.7.3 Inspection and repair of final rinse solenoid valve. See Fig. 6-7.

1. Disconnect electrical power supply to machine. Shut off water supply to the valve. Remove clip on top of molded coil and remove nameplate, coil, and fluxplate from solenoid base sub-assembly.

2. Unscrew 4 hex screws bolts and remove base sub-assembly, core assembly, and core spring. Remove diaphragm spring, diaphragm assembly, and body gasket.

3. Inspect rubber diaphragm for wear, deterioration, or holes. Inspect all parts for dirt, wear, lime build-up or physical damage. Clean or replace as required.

A repair kit (D2943-RK) is available to rebuild this valve. If the seat or the bottom half of the valve is worn or badly corroded, the entire valve must be replaced.

4. Reverse procedure to re-assemble valve. Note that the "tab" on the diaphragm must be above the valve "out" port.

6.2.7.4 Inspection and repair of steam solenoid valves. See Figure 6-8.

1. Disconnect electrical power supply to machine. Shut off steam supply to valve. Remove clip on top of molded coil and remove nameplate, coil, and spring washer from solenoid base sub-assembly.

2. Unscrew and remove solenoid base sub-assembly, core assembly, core spring, and solenoid base gasket.

3. Remove bonnet screws, valve bonnet, piston assembly, lip seal, support, inner and outer body gaskets.

4. Inspect all parts for wear, deterioration, dirt, lime build-up or physical damage. Clean or replace as required.

A repair kit (D2490-R3-RK) is available to rebuild this valve. If the bottom half of the valve is worn or badly corroded, the entire valve must be replaced.

5. Reverse procedure to re-assemble valve.

6.2.8 Removal and replacement of recirculating pump.

6.2.8.1 Before disassembling a pump, drain the tank and remove the suction strainer (inside tank). Inspect the pump inlet for foreign objects.

6.2.8.2 Working parts of pump can be serviced by removing the pump motor and impeller adapter (held on by four (4) 3/8" dia. hex head screws) from the pump body. See Fig. 7-3.

NOTE

It is not necessary to remove pump body from the machine.

6.2.8.3. Repair or replace pump motor or impeller as required.

6.2.9 Adjust liquid level timer.

During initial tank fill (via the final rinse), the float switch starts a timer that continues the fill until the water level reaches the slot at the top of the drain overflow tube. The timer is set to stop the fill when the level reaches the slot. Changes in rinse water pressure or clogged nozzles will cause greater or lesser rinse flow rates, causing over or under tank fill.

Checking for proper tank fill:

1. During a rinse cycle, adjust the rinse pressure to 20 psig.

2. After the rinse cycle stops, open the door, drain the tank, and replace the drain overflow tube.

3. Close the door. The rinse will run until the timer stops; then, the wash pump will start. Quickly turn the Power Switch to the "Off" position. Open the door and compare the water level to the slot in the overflow tube. Water level more than 1/4" above the slot indicates too long a fill time; water level more than 1/4" below the slot indicates too short a fill time.

4. The liquid level timer (item 18 in Fig. 7-9) is in the control panel. The time delay is adjusted by the slotted screw marked 1.2 to 20 sec. See Fig. 6-9. Increase the delay time by turning the screw clockwise (or decrease by turning counter-clockwise) in small increments. If needed, repeat above steps until the water level is within 1/4" of the slot.

6.2.10 Removal and replacement of liquid level float switch. See Figure 6-10.

6.2.10.1 Turn off dishwasher power at the main disconnect switch. Drain the tank.

6.2.10.2 Disconnect the two switch electric wires. Remove the hex nut and remove the switch from the inside of the tank.

6.2.10.3 Clean the tank surfaces. Replace the switch, with the rubber washer on the inside of the tank.

6.2.10.4 Fill the tank and check for leaks.

This page intentionally left blank

This page intentionally left blank

FIGURE 6–1

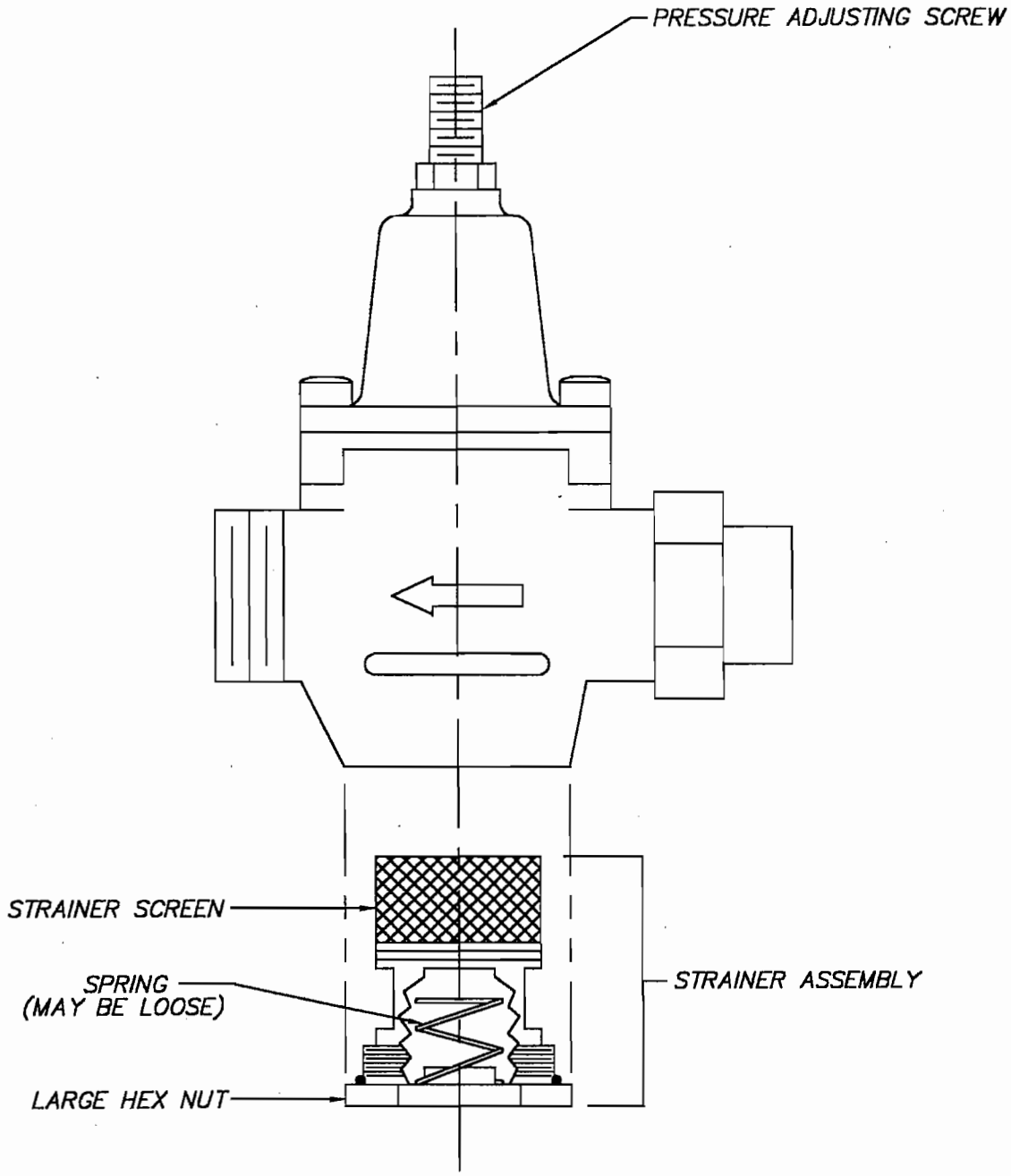

PRESSURE REDUCING VALVE
FINAL RINSE

SKETCHA\SK–4689

NO.	PART NO.	DESCRIPTION	QTY.
1	DE5-61	HI-TEMP. CUT-OFF SWITCH 3/8 NPT	1
2	1192-11	BRACKET, CUT-OFF SWITCH	1
3	D312C-DC-2	NUT, HEX #8-32	3
4	D2839	HOSE CLAMP, S/S	2
5	D318F-B5-B5	BULKHEAD FITTING	1
6	D3-545	"O" RING	1

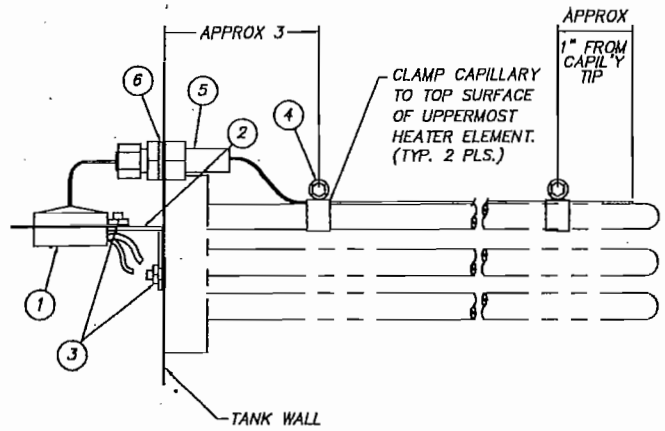

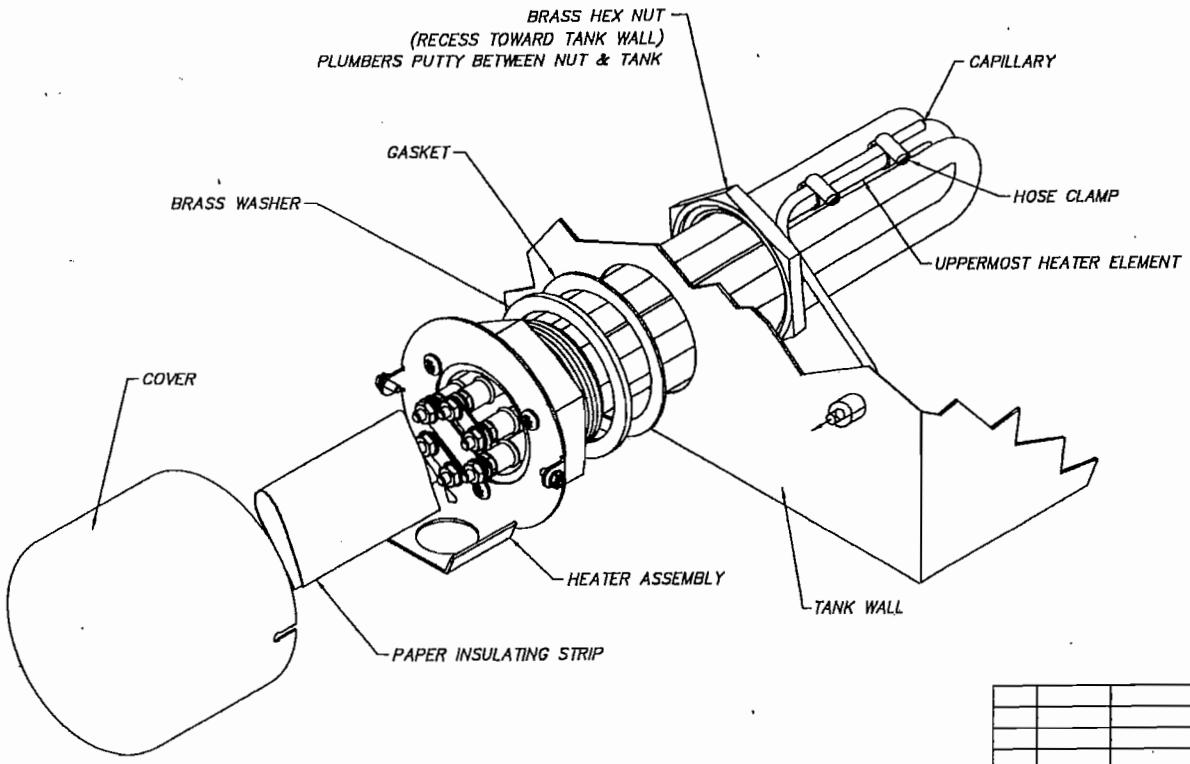

REV	ECN NO	DATE
A	2006	3.2.04

FILE: SKETCH\SK-4596

TOLERANCES
FRACTIONS ±1/64
DECIMALS
.XXX ± .005
.XX ± .01
ANGLES ±1/2°
UNLESS OTHERWISE SPECIFIED

TITLE: ELECTRIC HEATER INSTALLATION

MAT'L

NEXT ASSY: –
REQ'D: 1
SCALE: 1=2
DWG. NO.: SK-4596
USED ON: 455A5

Insinger
Philadelphia, PA 19135
(215) 624-4800
FAX (215) 624-8866

DRWN/DATE: GP 11.04.03

Fig. 6-2

FIGURE 6-3

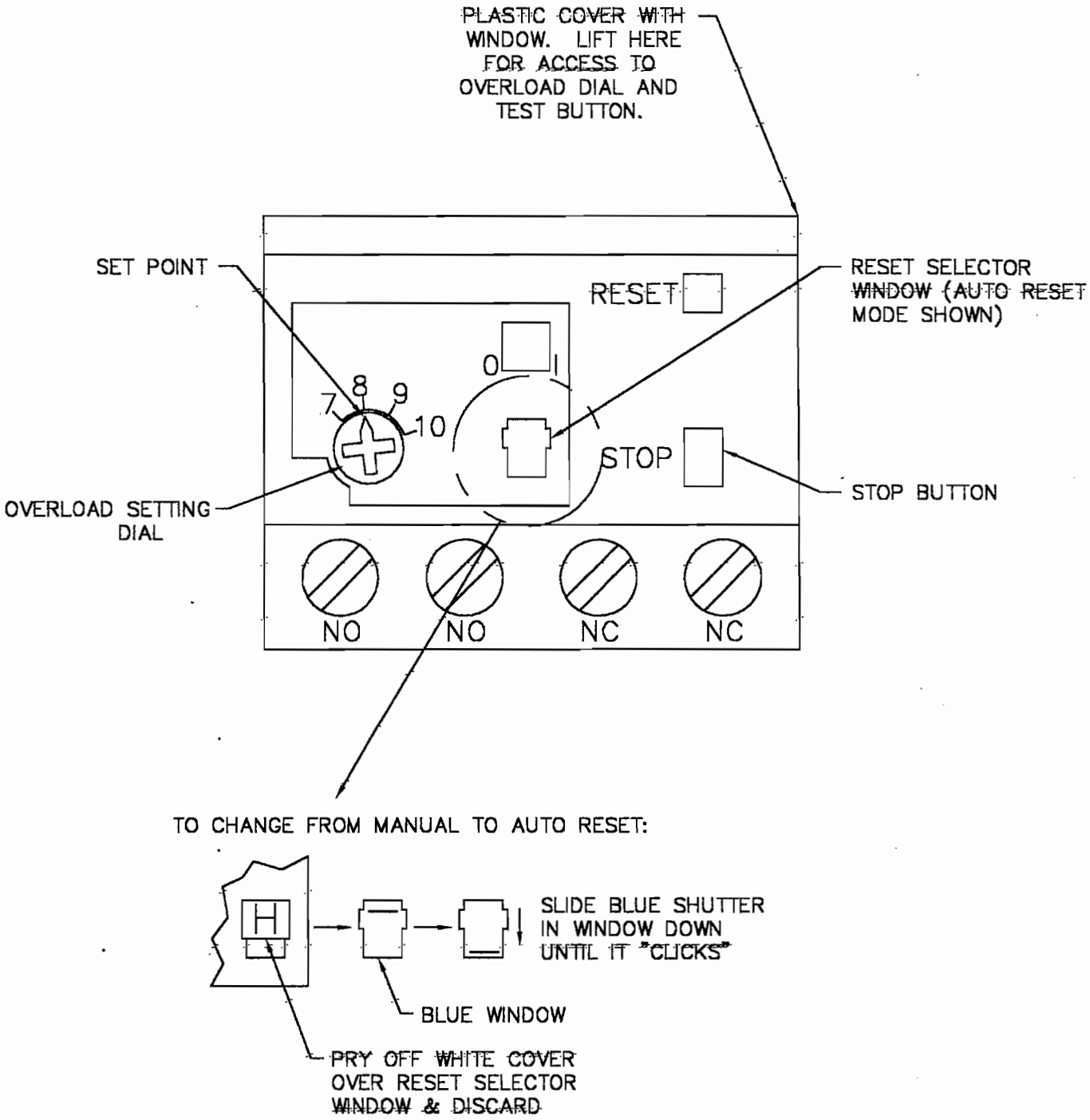

OVERLOAD RELAY SETTINGS

SKETCHA\SK-3829

FIGURE 6-4

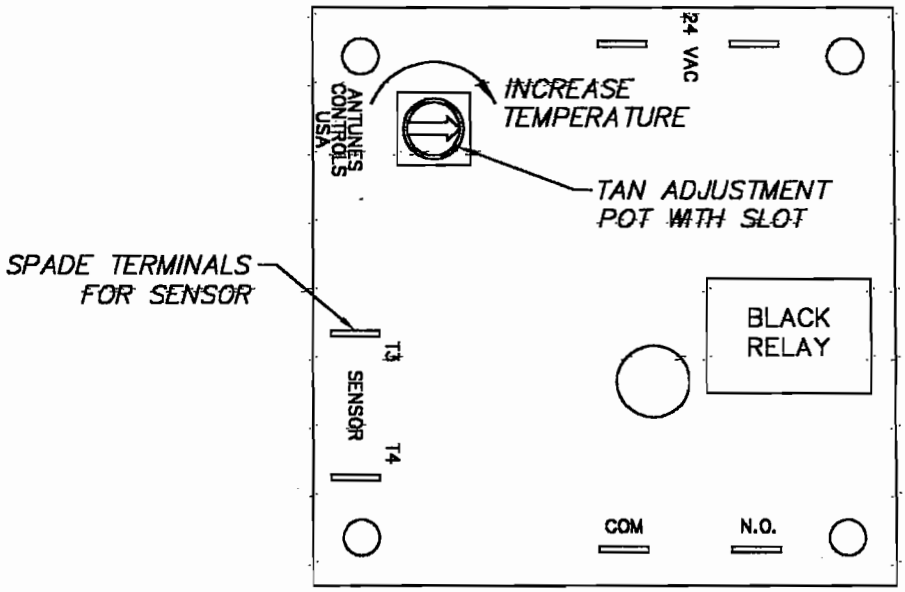

TANK TEMPERATURE CONTROL BOARD
(DE9-251)

SKETCHA\SK-4686

FIGURE 6-5

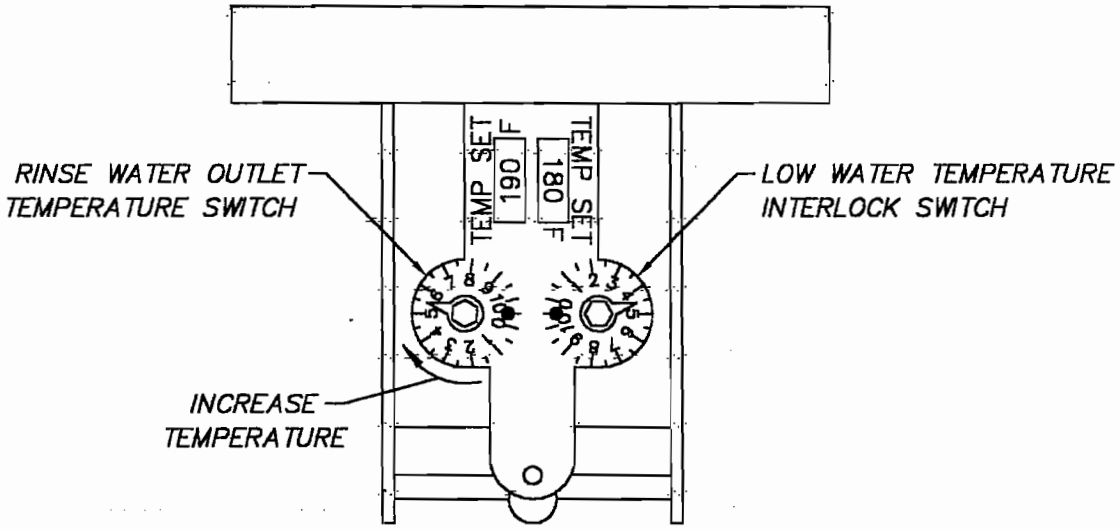

(ROUND COVER REMOVED)

STEAM BOOSTER TEMPERATURE CONTROLLER
(D2301)

SKETCHA\SK-4687

FIGURE 6–6

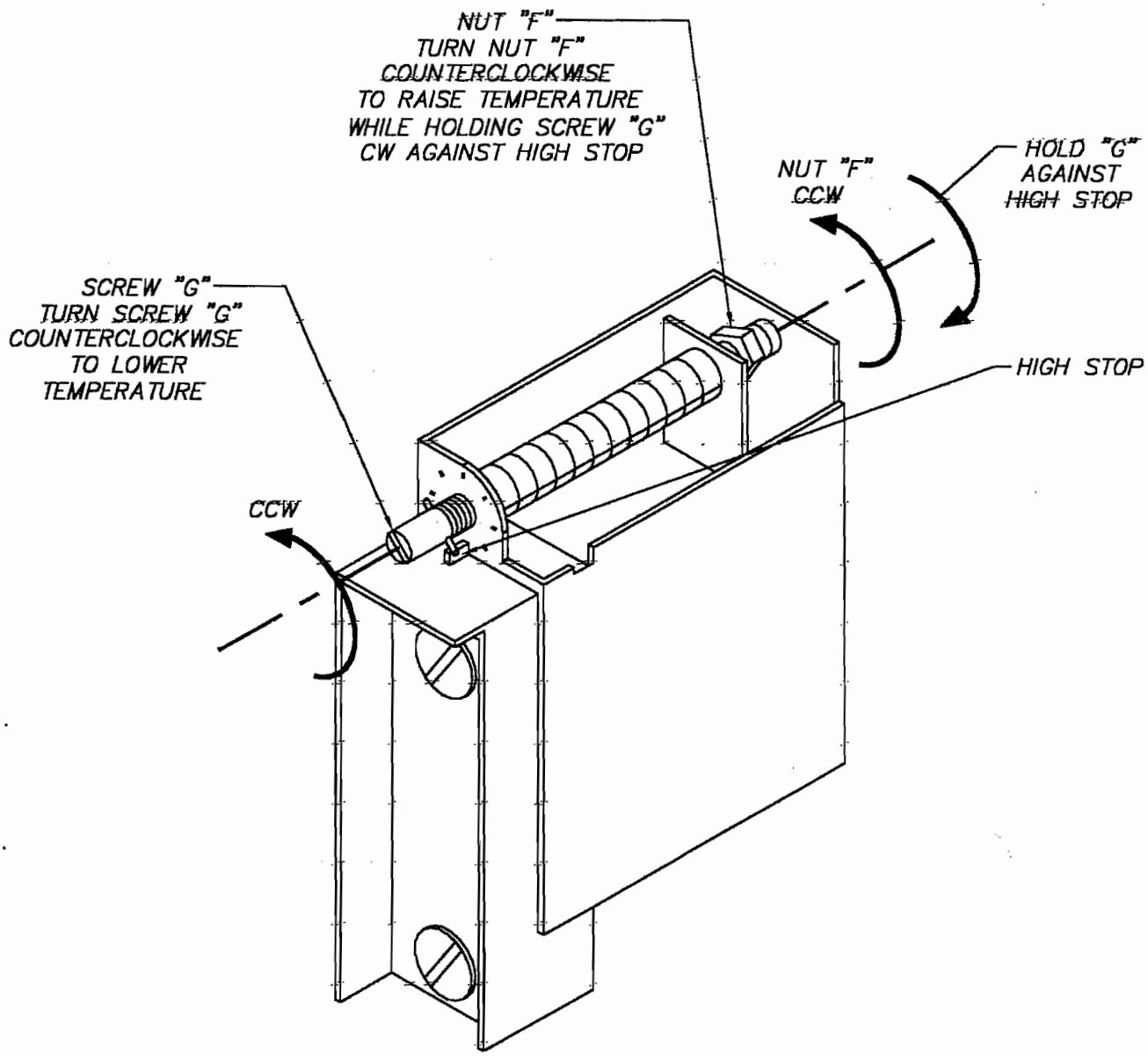

THERMOSTAT
ELECTRIC BOOSTER
6–16

SKETCHA\SK–4688

FIGURE 6–7

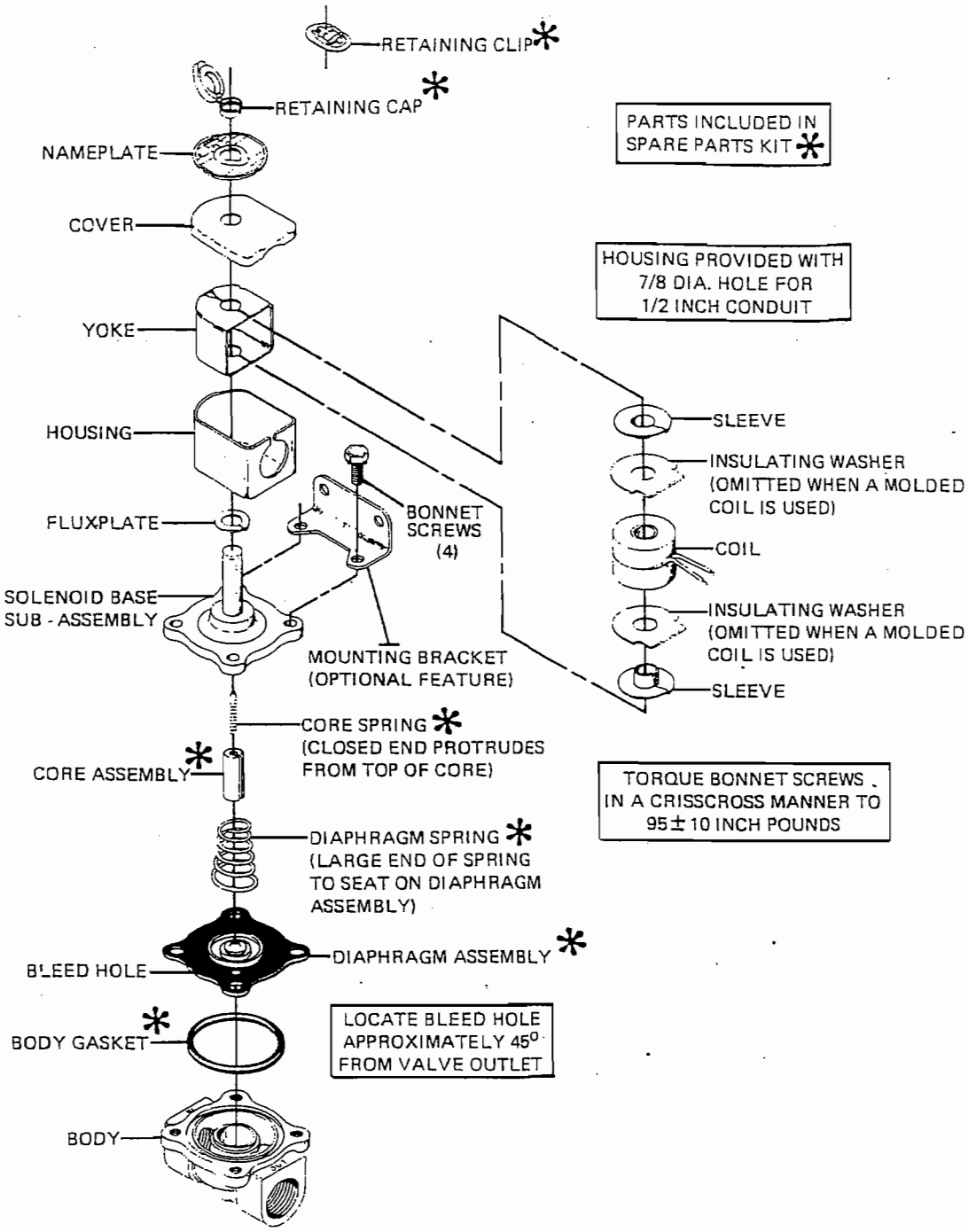

SOLENOID VALVE
FINAL RINSE

SKETCHA\SK–4692

FIGURE 6–8

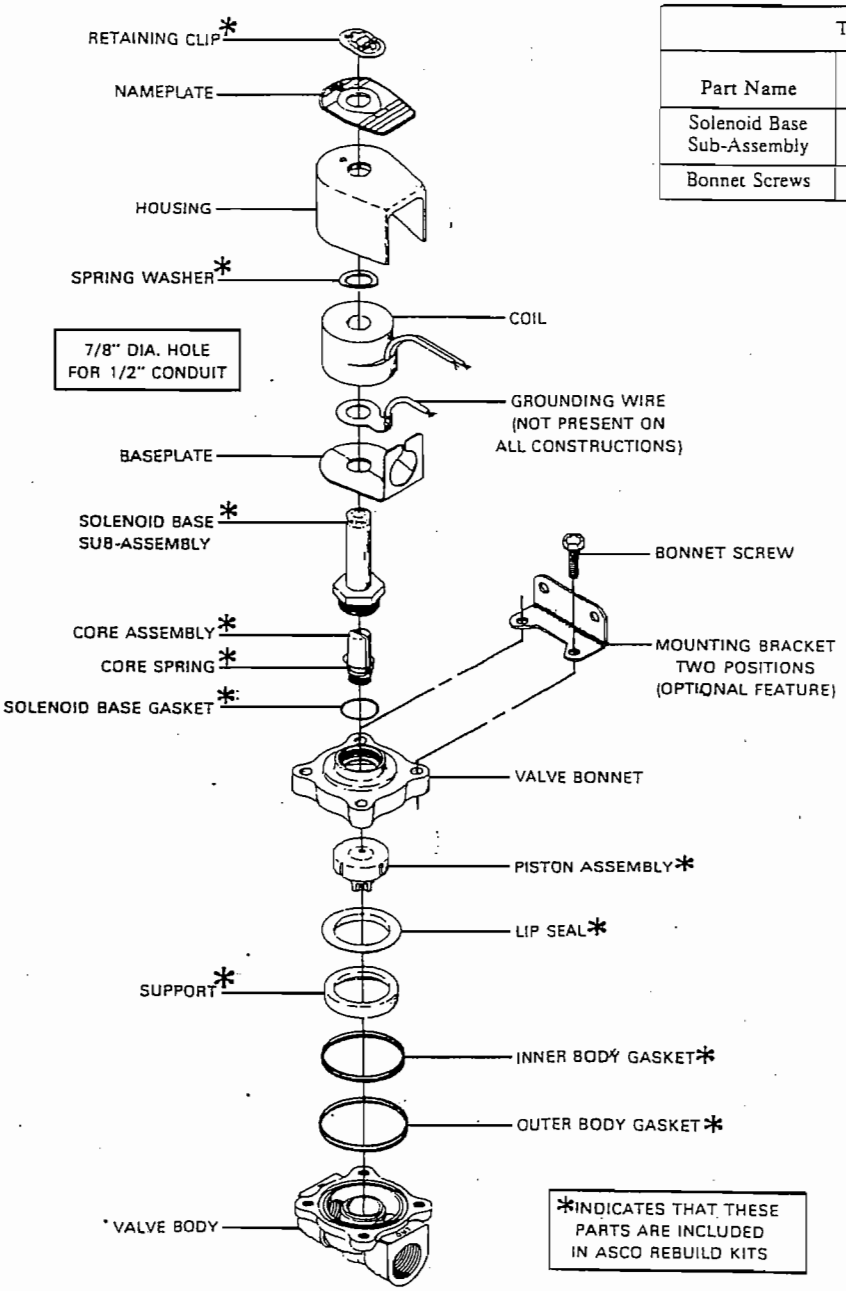

TORQUE CHART	
Part Name	Torque Value Inch-Pounds
Solenoid Base Sub-Assembly	175 ± 25
Bonnet Screws	95 ± 10

SOLENOID VALVE
STEAM

SKETCHA\SK–4693

FIGURE 6–9

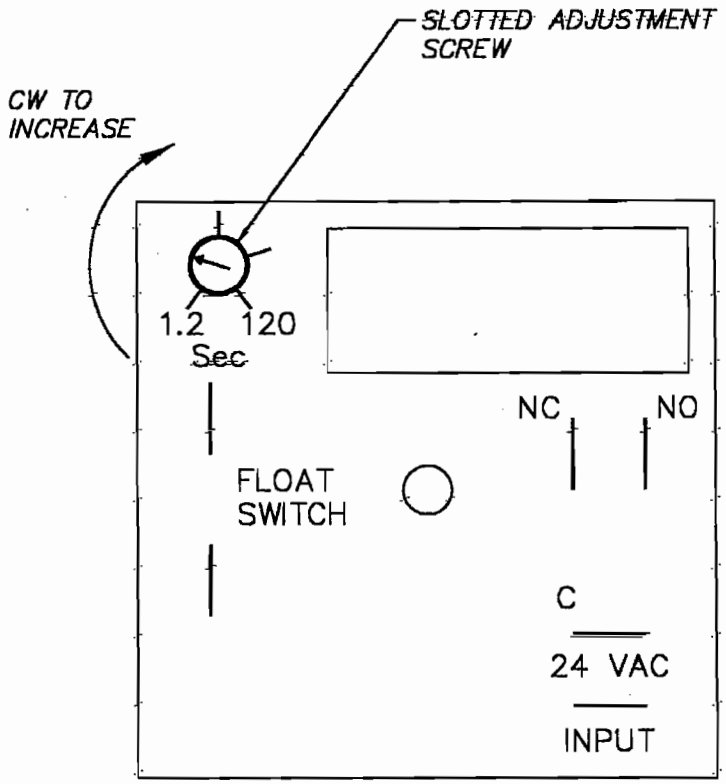

LIQUID LEVEL TIMER
DE7–35
6–19

SKETCHA\SK–4698

FIGURE 6-10

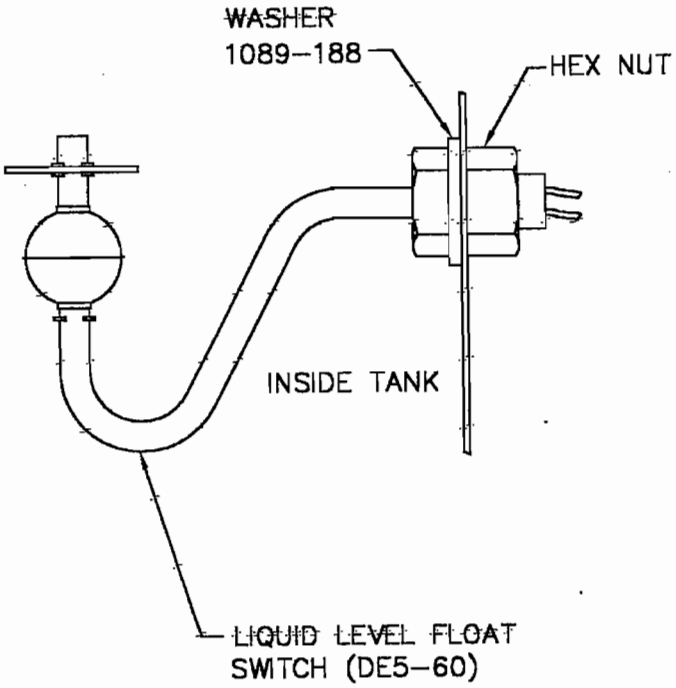

LIQUID LEVEL FLOAT SWITCH

SKETCHA\SK-3704

CHAPTER 7.0

PARTS LIST

7.1 INTRODUCTION

This chapter lists replaceable parts, referenced to part breakdown drawings.

No listing has been provided for parts of permanently assembled items, or for those items which are not suited to field replacement.

7.2 PARTS PROCUREMENT

All parts are available from the Insinger Machine Company, Philadelphia, Pennsylvania 19135.

7.3 RECOMMENDED SPARE PARTS

Item	PN	NIIN	Description	Qty	Rec. Spares
			Parts List (see Fig. 7-1 & 7-2)		
1	3018-K188		Pump & motor assy	1	1
	D-432	01-167-2898	Impeller, 3.0" dia.	1	1
	D2-534	01-152-5505	Seal assy	2	2
2	975-181		Suction strainer assy	1	1
3	963-56		Drain overflow tube	1	2
4	967-71		Scrap screen, rear	1	1
6	D2907		Pull ring spring plunger	2	2
7	D2-554-2	01-228-7749	Pipe plug, 3/4-10	8	8
8	D514	00-409-5695	Gasket	1	1
9	D2769	01-414-8033	Nozzle, upper rinse	4	4
14	D2243	01-215-3188	Vacuum breaker, 3/4"	1	1
15	D2244		Vacuum breaker repair kit	-	1
16	D2930		Thermometer	2	2
25	D2770	01-414-5611	Nozzle, lower rinse	6	6
26	967-77	01-416-0332	Microswitch assy	1	1
28	DE5-60		Liquid level float switch	1	2
35	D2-558		End plug retainer	8	8
36	963-57		Scrap screen, front	1	1
			Additional Parts Steam heated machines (see Fig. 7-5 & 7-6)		
	D2102	01-147-5634	Steam trap	2	2
	D2490-R3	01-331-0540	Steam solenoid valve	2	2
	D2490-R3-RK		Steam valve repair kit	-	2
	D2301	01-171-0199	Thermostat, booster	1	1
	D2507	01-265-3181	Pressure relief valve	1	1

7.3 RECOMMENDED SPARE PARTS (con't)

Item	PN	NIIN	Description	Qty	Rec. Spares
			Additional Electrical Parts Steam heated machines (see Fig. 7-9)		
4	DE9-166		Fuse, FNQ-R-.75	2	2
5	DE2-50		Overload relay, pump	1	1
6	DE1-109		Contactor, pump	1	1
8	DE7-27	01-356-1181	Time delay board	2	1
10	DE2-38	01-353-6320	Relay	2	1
17	DE9-251		Temperature control bd.	1	1
	DE9-252		Temperature sensor	1	5
18	DE7-35		Timer, liquid level	1	1
23	DE9-107	01-416-4252	Pilot light, red	1	1
24	DE9-108	01-415-2206	Pilot light, white	1	1
25	DE9-109	01-416-0333	Pilot light, amber	1	1
			Additional Electrical Parts Electric heated machines (see Fig. 7-9)		
4	DE9-166		Fuse, FNQ-R-.75	2	2
5	DE2-50		Overload relay, pump	1	1
6	DE1-109		Contactor, pump	1	1
7	DE1-109		Contactor, elec. heat	1	1
8	DE7-27	01-356-1181	Time delay board	2	1
10	DE2-38	01-353-6320	Relay	2	1
17	DE9-251		Temperature control bd.	1	1
	DE9-252		Temperature sensor	1	5
18	DE7-35		Timer, liquid level	1	1
	DE13-SB73		Tank heater, 1.5 KW	1	1
23	DE9-107	01-416-4252	Pilot light, red	1	1
24	DE9-108	01-415-2206	Pilot light, white	1	1
25	DE9-109	01-416-0333	Pilot light, amber	1	1

This page intentionally left blank

This page intentionally left blank.

Fig. 7-1

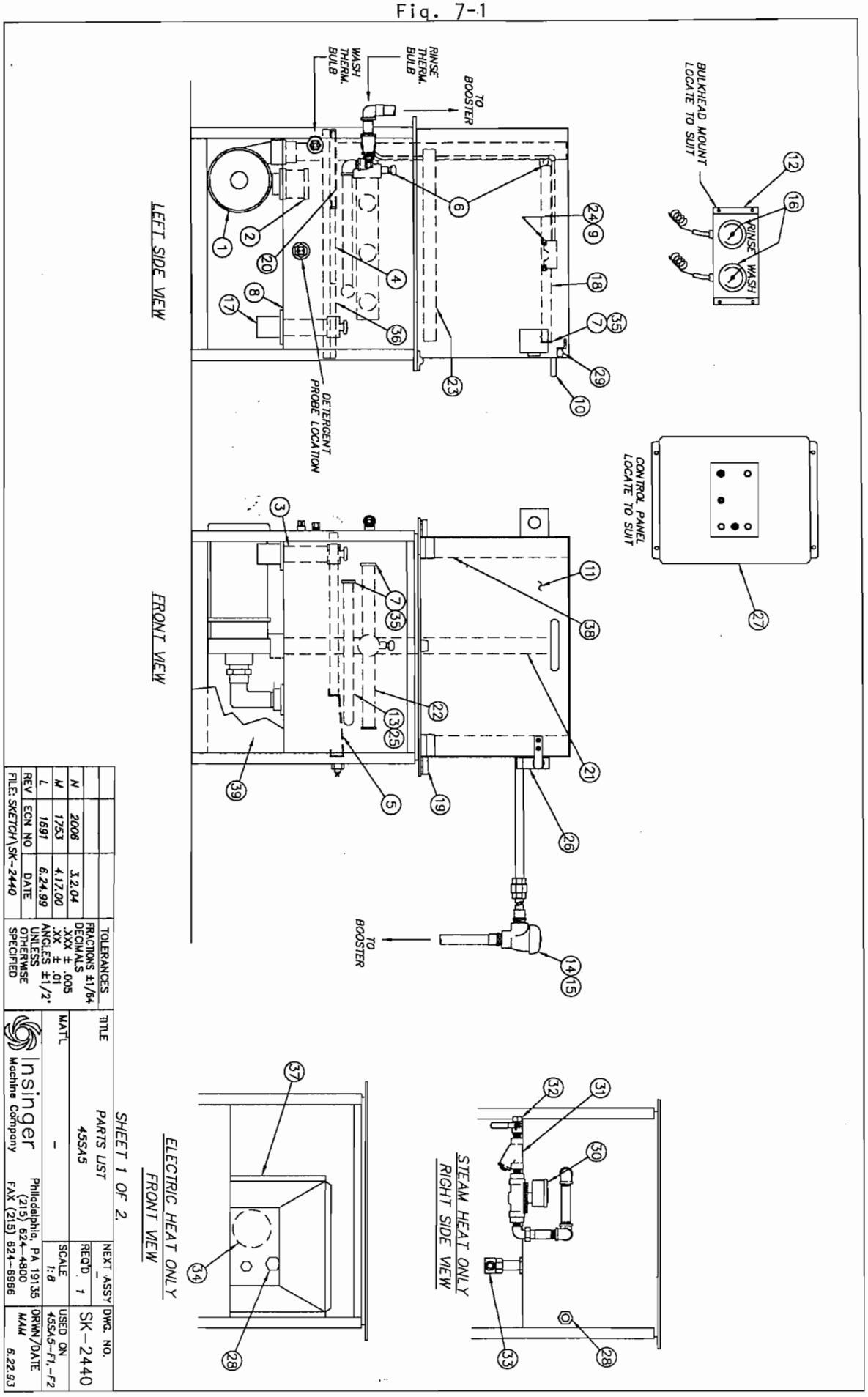
BULKHEAD MOUNT LOCATE TO SUIT
RINSE
WASH
CONTROL PANEL LOCATE TO SUIT
TO BOOSTER
RINSE THERM. BULB
WASH THERM. BULB
DETERGENT PROBE LOCATION
LEFT SIDE VIEW
FRONT VIEW
TO BOOSTER
STEAM HEAT ONLY RIGHT SIDE VIEW
ELECTRIC HEAT ONLY FRONT VIEW
SHEET 1 OF 2.
PARTS LIST
45SA5
TITLE
MATL
-
TOLERANCES
FRACTIONS ±1/64
DECIMALS .XXX ± .005
.XX ± .01
ANGLES ±1/2°
UNLESS OTHERWISE SPECIFIED
N 2006 3.2.04
M 1753 4.17.00
L 1691 6.24.99
REV ECN NO DATE
FILE: SKETCH\SK-2440
Insinger Machine Company
Philadelphia, PA 19135
(215) 624-4800
FAX (215) 624-6966
NEXT ASSY
REQ'D 1
SCALE 1:8
DWG. NO.
SK-2440
USED ON
45SA5-F1,-F2
DRWN/DATE
MAM 6.22.93

Fig. 7-2

	ITEM	PART NO.	DESCRIPTION	QTY.
*	30	D2490-R3	STEAM SOLENOID VALVE, 3/4 IPS	1
*	31	D2483A	"Y" STRAINER 1/2 IPS	1
*	32	D2953	BALL VALVE 1/2 IPS	1
*	33	D2102	STEAM TRAP 3/8 IPS	1
**	34	DE13-SB73	TANK HEATER 1.5 KW	1
	35	DE3-558	END PLUG RETAINER	8
	36	963-57	SCRAP SCREEN, FRONT	1
**	37	967-90	HEATER COVER	1
	38	967-85	BAFFLE	2
*	39	967-93S	FRONT PANEL (STEAM HEAT)	1
**		967-93E	FRONT PANEL (ELECTRIC HEAT)	1

ITEM	PART NO.	DESCRIPTION	QTY.
1	3018-K188	PUMP & MOTOR ASSY.	1
2	975-181	SUCTION STRAINER ASSY.	1
3	963-56	DRAIN OVERFLOW TUBE	1
4	967-71	SCRAP SCREEN, REAR	1
5	967-74	SCRAP SCREEN SPACER - SIDE	1
6	D2907	PULL RING SPRING PLUNGER	2
7	D2-554-2	PIPE PLUG, 3/4-10	8
8	D514	GASKET	1
9	D2769	NOZZLE, UPPER RINSE (HH-5)	4
10	D2099	DOOR HANDLE	1
11	343-30	DOOR ASSY.	1
12	963-47	THERMOMETER GUARD	1
13	D641	SPRAY COIL ASSY.	1
14	D2243	VACUUM BREAKER, 3/4"	1
15	D2244	VACUUM BREAKER REPAIR KIT	1
16	D2390	THERMOMETER	2
17	967-82	DRAIN FLANGE	1
18	199-42	SPRAY PIPE - UPPER	1
19	259-12	HINGE	2
20	963-44	SCRAP SCREEN SPACER - REAR	1
21	963-8A	DISCHARGE TUBE ASSY.	1
22	963-12A	MANIFOLD ASSY.	1
23	967-7	TRACK	1
24	D2079	SPRAY BODY - UPPER	1
25	D2770	NOZZLE, LOWER RINSE (HH-3)	6
26	967-77	MICROSWITCH ASSY.	1
27	SK-3574	ELECT. CONTROL PANEL (SEE PARTS LIST)	1
28	DE5-60	LIQUID LEVEL FLOAT SWITCH	1
29	D2543	DOOR LATCH ASSEMBLY	1

SHEET 2 OF 2.

* - STEAM HEAT ONLY
** - ELECTRIC HEAT ONLY

REV	ECN NO	DATE
N	2006	3.2.04
M	1753	4.17.00
L	1691	6.24.99

FILE: SKETCH\SK-2440

TOLERANCES
FRACTIONS ±1/64
DECIMALS
.XXX ± .005
.XX ± .01
ANGLES ±1/2°
UNLESS OTHERWISE SPECIFIED

TITLE: PARTS LIST 45SA5
MAT'L: -
NEXT ASSY: -
REQ'D: 1
SCALE: FULL
DWG. NO.: SK-2440
USED ON: 45SA5-F1,-F2
DRWN/DATE: MAM 6.22.93

Insinger Machine Company
Philadelphia, PA 19135
(215) 624-4800
FAX (215) 624-6966

ITEM	PART NO.	DESCRIPTION	QTY.
1	D2468 EF3D 2BA	MOTOR ONLY, 1/2 H.P.	1
2	D431	ADAPTER	1
3	D432	IMPELLER 3"	1
4	D434	CASING	1
5	D2-532	"O" RING	1
6	D2-533	FLINGER	1
7	D2-534	SEAL ASSEMBLY	1
8	D322F-C2B1	HEX REDUCER, 3/8-1/4 NPT	1
9	D3-808	IMPELLER RETAINING NUT	1
10	D329-5	PETCOCK	1

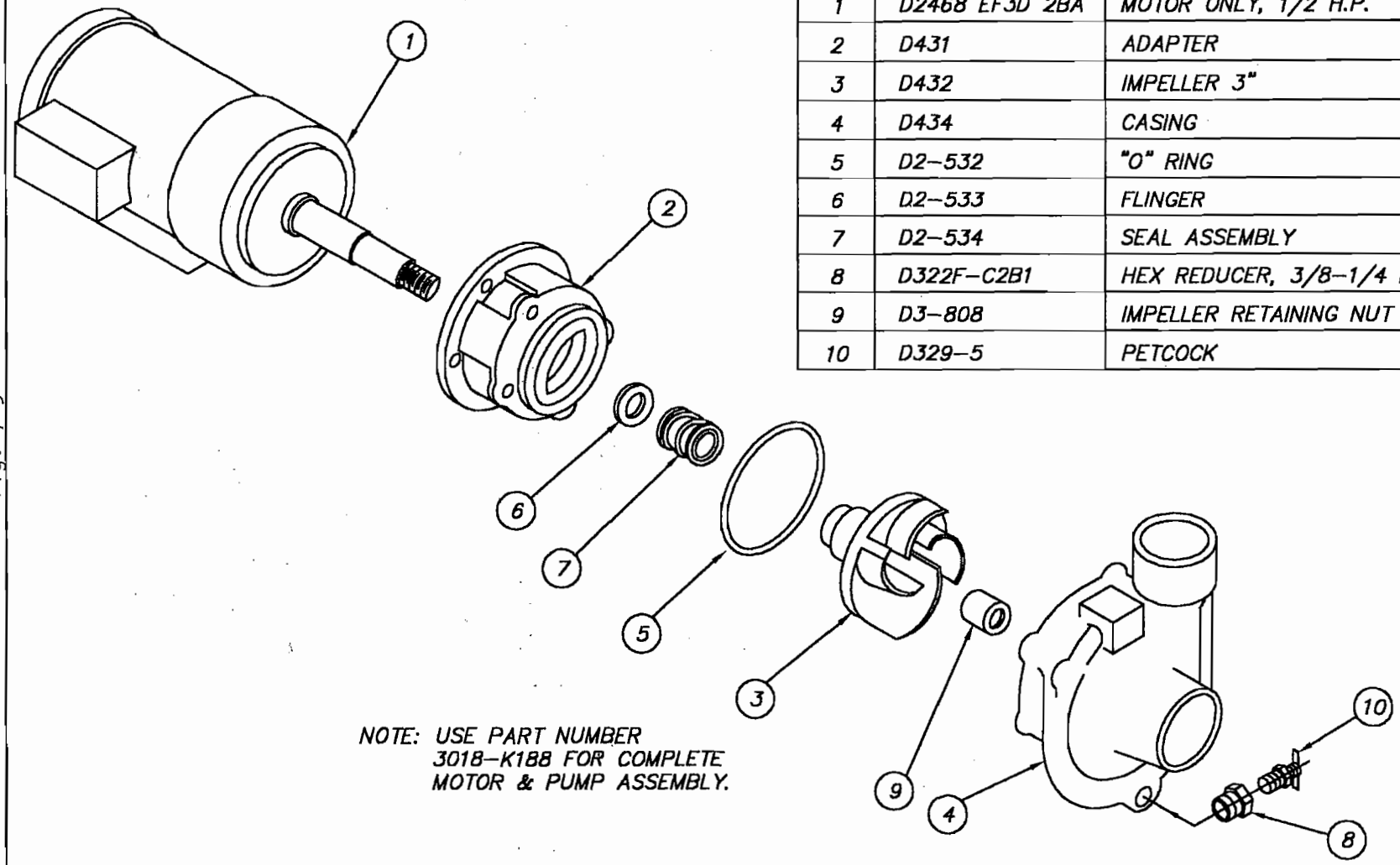

NOTE: USE PART NUMBER 3018-K188 FOR COMPLETE MOTOR & PUMP ASSEMBLY.

REV	ECN NO	DATE

FILE: SKETCHA\SK-2397A

TOLERANCES
FRACTIONS ±1/64
DECIMALS
.XXX ± .005
.XX ± .01
ANGLES ±1/2°
UNLESS OTHERWISE SPECIFIED

TITLE: PARTS LIST 1/2 HP PUMP

MAT'L: –

NEXT ASSY: –
REQ'D: –
SCALE: FULL

DWG. NO. SK-2397A
USED ON 45SA5
DRWN/DATE MFJ 2.24.04

Insinger
Philadelphia, PA 19135
(215) 624-4800
FAX (215) 624-6966

Fig. 7-3

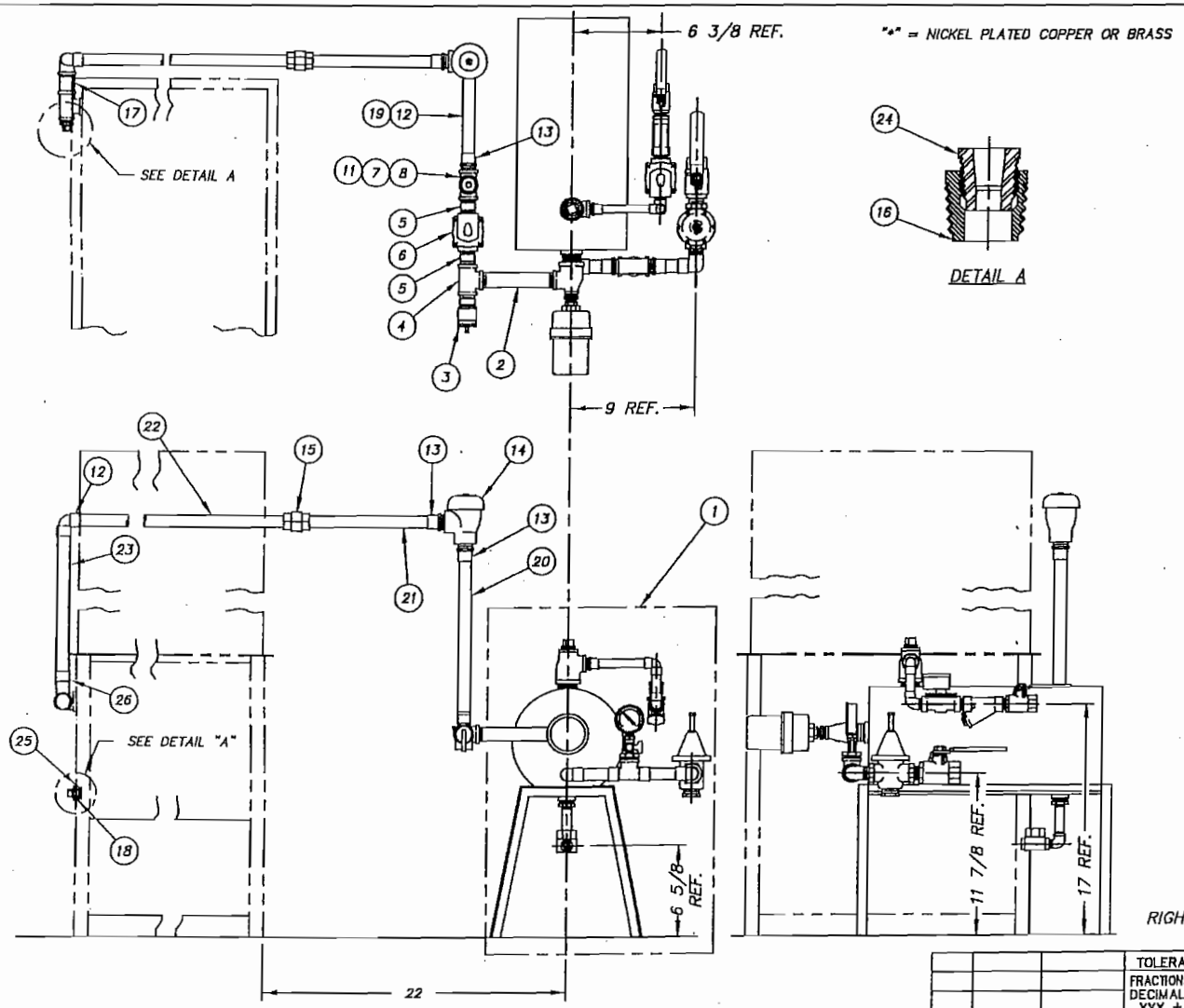

ITEM	PART NO.	DESCRIPTION	QTY.
1	1394-11	STEAM BOOSTER W/O UNLOAD	1
2	D314F-ES-48	NIPPLE 3/4 IPS x 6" LG.	1
3	D2507	RELIEF VALVE 3/4 IPS	1
4	D320F-E1E1E1	TEE 3/4 IPS	1
5	D314F-EC-00	CLOSE NIPPLE 3/4 IPS	2
6	D2943	RINSE SOLENOID VALVE, 3/4 IPS	1
7	D320F-E1E1D1	TEE 3/4 FIPS x 3/4 FIPS x 1/2 FIPS	1
8	D322F-B1-D2	1/8" IPS PIPE PLUG	1
9	–	–	–
10	–	–	–
11	D322F-A1-D2	HEX. RED. 1/2 MIPS x 1/8 FIPS	1
12	D316A-E3-E3	90° ELL. 3/4 C	2
13	D317A-E2-E3	ADAPTER 3/4 MIPS x 3/4 C	2
14	D2243	VACUUM BREAKER 3/4 IPS	1
15	D318A-E3-E3	ST. UNION 3/4 C	1
* 16	D2390SP-1	BRASS UNION FOR SPLIT JAM NUT	2
17	D314F-ES-20	NIPPLE 3/4 IPS X 2 1/2 LG.	1
* 18	D326F-E1	LOCK NUT 3/4 IPS	1
19	D207A-B6-44	COPPER TUBING 3/4 CTS X 5 1/2 LG.	1
20	D207A-B6-52	COPPER TUBING 3/4 CTS x 13" LG.	1
21	D207A-B6-38	COPPER TUBING 3/4 CTS X 9 1/2 LG.	1
(R.H.) 22	D207A-B6-96	COPPER TUBING 3/4 CTS X 24"LG.	1
(L.H.)	D207A-B6-21	COPPER TUBING 3/4 CTS x 5 1/4" LG.	1
23	D207A-B6-42	COPPER TUBING 3/4 CTS x 10 1/2" LG.	1
* 24	D2390SP	SPLIT JAM NUT	2
25	D740	SPACER	1
26	D316F-E3-E1	90° ST. ELL 3/4 C X 3/4 FIPS	1

RIGHT SIDE MOUNTING SHOWN – LEFT SIDE MOUNTING OPPOSITE

REV	ECN NO	DATE
F	2006	3.2.04
E	1398	3.21.96

FILE: PARTS\967-64

TOLERANCES
FRACTIONS ±1/64
DECIMALS
.XXX ± .005
.XX ± .01
ANGLES ±1/2°
UNLESS OTHERWISE SPECIFIED

TITLE: STEAM BOOSTER TO FINAL RINSE PIPING

MAT'L: –

NEXT ASSY: –
REQ'D: 1
SCALE: 1=8
DWG. NO. 967-64
USED ON 45SA5
DRWN/DATE RFN 1.24.92

Insinger
Philadelphia, PA 19135
(215) 624-4800
FAX (215) 624-6968

Fig. 7-4

ITEM	PART NO.	DESCRIPTION	QTY.
1	D-2100	STEAM BOOSTER (1-2) (NOTE #1)	1
2	278-1A	BOOSTER STAND (NOTE #2)	1
3	D314F-FC-00	CLOSE NIPPLE 1" IPS	1
4	D316F-F2-F1	90° STREET ELL 1 MIPS X 1 FIPS	1
5	D316A-E3-E2	90° ELBOW 3/4 C X 3/4 MIPS	1
6	D322F-F2-E1	HEX REDUCER, 1" MIPS X 3/4" FIPS	1
7	D318F-E1-E1	UNION, 3/4" FIPS	1
8	D316F-E1-E2	90° STREET ELL, 3/4"	2
9	D314F-ES-16	NIPPLE, 3/4 IPS X 2 LG	1
10	D2490-R3	STEAM SOLENOID VALVE, 3/4 IPS	1
11	D2482	"Y" STRAINER 3/4 IPS	1

ITEM	PART NO.	DESCRIPTION	QTY.
12	D316A-E2-E3	90° ELBOW 3/4 MIPS X 3/4 C	1
13	D207A-K6-13	COPPER TUBING 3/4 C X 3 3/8 LG	2
14	D2508	PRESS. REG. & STRAINER 3/4 IPS	1
15			
16	D2954	BALL VALVE 3/4 IPS	2
17	D320F-F1D1E1	TEE 1" IPS X 1/2 IPS X 3/4 IPS	1
18	D322F-D2-C1	HEX REDUCER 1/2 MIPS x 3/8 FIPS	1
19	D-2301	THERMOSTAT (DUAL BURLING)	1
20	D322F-E2-C1	HEX REDUCER 3/4 MIPS X 3/8 FIPS	1
21	D314F-CS-20	NIPPLE 3/8 IPS X 2 1/2 LG	1
22	D316F-C2-C1	90° STREET ELL 3/8 MIPS X 3/8 FIPS	1

ITEM	PART NO.	DESCRIPTION	QTY.
23	D2102	STEAM TRAP 3/8 IPS	1
24	D314F-ES-48	NIPPLE 3/4 IPS X 6 LG.	1
25	D320F-E1E1E1	TEE 3/4 FIPS	1
26	D2507	PRESSURE RELIEF VALVE 3/4 IPS	1
27	D318A-E3-E2	UNION, 3/4 C X 3/4 M	1
28	D314F-EC-00	CLOSE NIPPLE 3/4 IPS	4
29	D320A-E3E3D1	TEE 3/4 C X 3/4 C X 1/2 FIPS	1
30	D322F-B1-D2	HEX. RED. 1/2 FIPS X 1/4 FIPS	1
31	D2497	PET COCK 1/4 IPS	1
32	SK-1433	PRESSURE GAUGE 1/4 IPS	1

Fig. 7-5

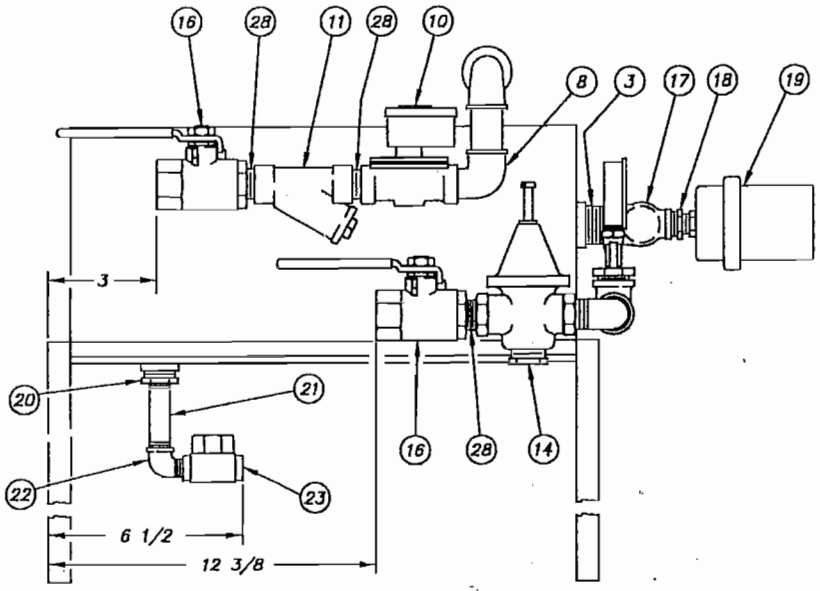

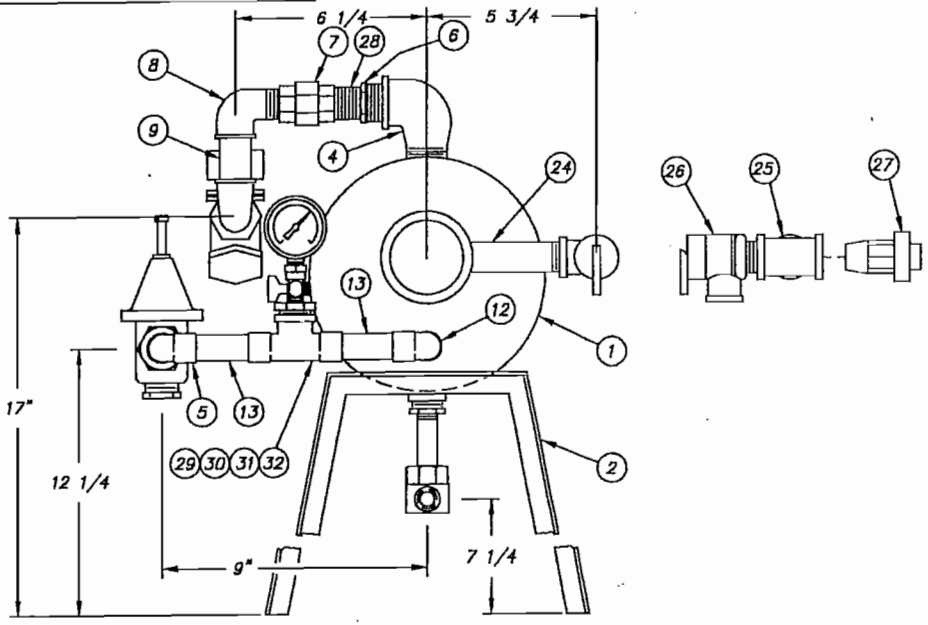

NOTES:

1. (ITEM #1) ADD SUFFIX "NM" FOR NON-MAGNETIC MACHINES.

L.H. MOUNTING SHOWN – R.H. MOUNTING OPPOSITE

REV	ECN NO	DATE
F	2006	3.2.04
E	1916	2.21.02
D	1398	3.21.96
C	1158	3.29.95

FILE: PARTS\1394-11

TOLERANCES: FRACTIONS ±1/64, DECIMALS .XXX ± .005, .XX ± .01, ANGLES ±1/2° UNLESS OTHERWISE SPECIFIED

TITLE: STEAM BOOSTER ASSEMBLY

MAT'L: AS NOTED

NEXT ASSY: REQ'D 1

SCALE: 1=4

USED ON: 45SA5

DWG. NO. 1394-11

DRWN/DATE: PG 7.8.93

Insinger — Philadelphia, PA 19135, (215) 624-4800, FAX (215) 624-6966

ITEM	DESCRIPTION	PART NO.	QTY.
1	STEAM COIL S/S	967-19A	1
2	LOCKNUT 1/2" IPS	D326F-D1	2
3	NIPPLE 1/2" IPS x 1 1/2" ALL THREAD	D314F-DA-12	1
4			
5	NIPPLE, 1/2" IPS X 5 LG	D314F-DS-40	1
6			
7	NIPPLE, 1/2" IPS X 1 3/4" LG	D314F-DS-14	1
8	90° UNION ELBOW, 1/2 FIPS X 1/2 FIPS	D319F-D1-D1	1
9	HEX REDUCER 3/4" MIPS x 1/2" FIPS	D322F-E2-D1	2
10	STEAM SOLENOID VALVE, 3/4" IPS	D2490-R3	1
11	CLOSE NIPPLE 1/2" IPS	D314F-DC-00	4
12	"Y" STRAINER 1/2" IPS	D-2483A	1
13	BALL VALVE 1/2" IPS	D2953	1
14	NIPPLE 1/2" IPS x 2 1/2" L.O.E.	D314F-DL-20	1
15	90° ELBOW 1/2" IPS	D316F-D1-D1	4
16	REDUCER 1/2" MIPS x 3/8" FIPS	D322F-D2-C1	1
17	NIPPLE 3/8" IPS x 2 1/2" LG.	D314F-CS-20	1
18	STEAM TRAP 3/8" IPS	D-2102	1
19	SUPPORT BRACKET	967-43	1

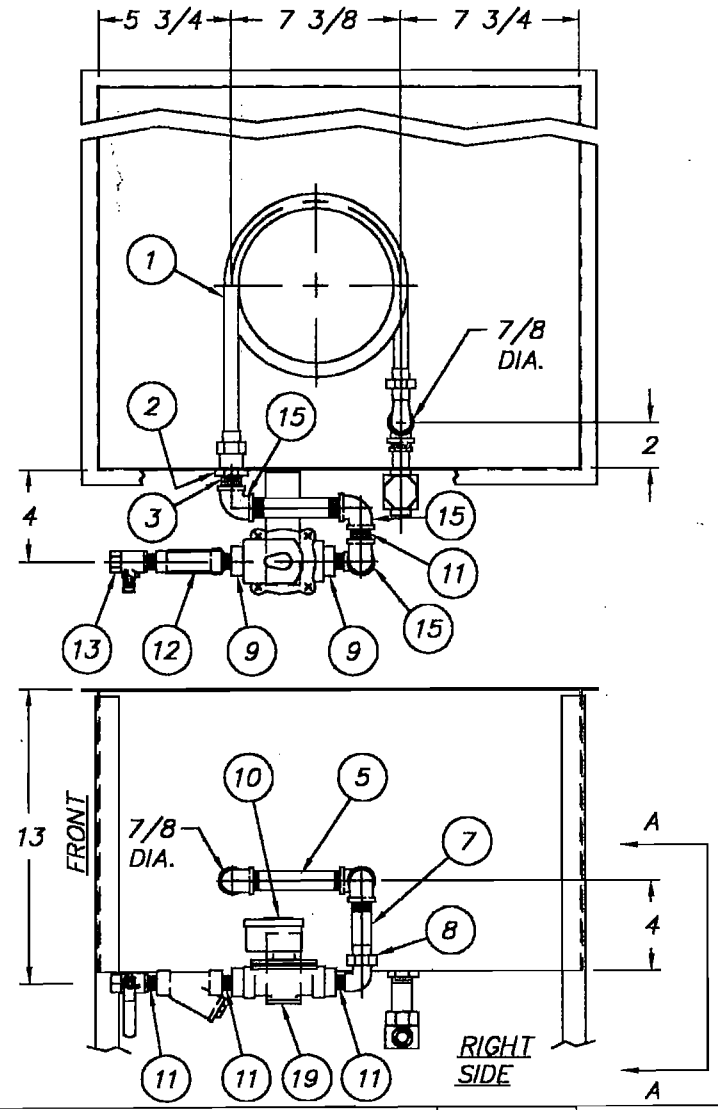

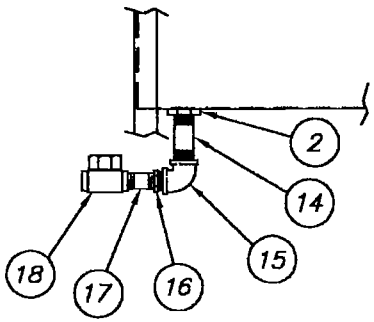

			TOLERANCES
D	2006	3.2.04	FRACTIONS ±1/64
C	1576	9.3.97	DECIMALS
B	1404	4.10.96	.XXX ± .005
A	296	8.28.89	.XX ± .01
REV	ECN NO	DATE	ANGLES ±1/2° UNLESS OTHERWISE SPECIFIED
FILE: PARTS/967-20A			

TITLE	STEAM COIL ASS'Y. TEMPERATURE REGULATOR	NEXT ASSY —	DWG. NO. 967-20A
		REQ'D 1	
MAT'L	NOTED	SCALE 1=8	USED ON 45SA5-F1
Insinger	Philadelphia, PA 19135 (215) 624-4800 FAX (215) 624-6966		DRWN/DATE EMM 11.13.84

Fig. 7-6

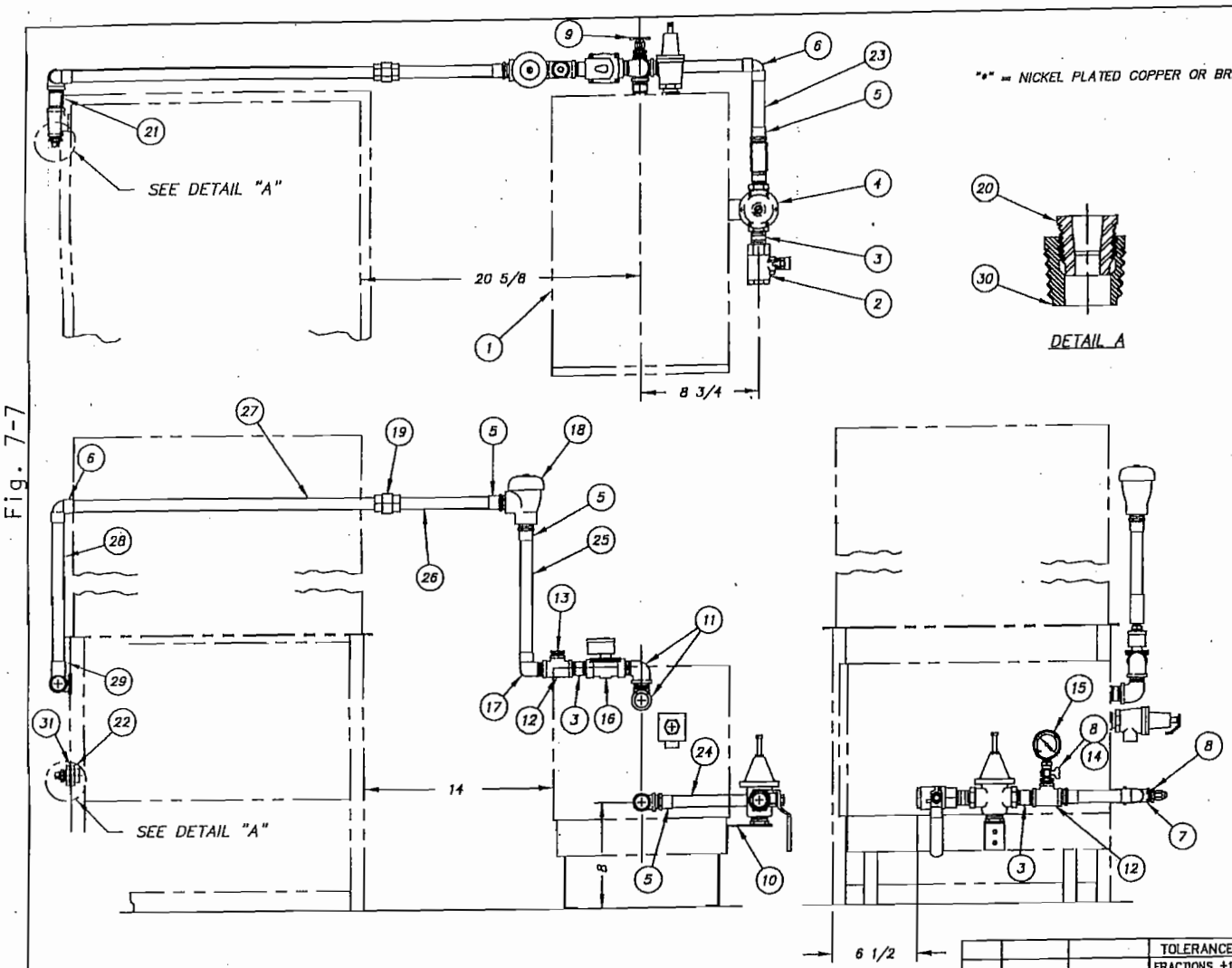

	ITEM	PART NO.	DESCRIPTION	QTY.
	1	PER SPEC.	ELECTRIC BOOSTER	1
	2	D2954	BALL VALVE 3/4 IPS	1
	3	D314F-EC-00	CLOSE NIPPLE 3/4 IPS	3
	4	D2508	PRESS. REG. & STRAINER 3/4 IPS	1
	5	D317A-E3-E2	ADAPTER 3/4 C X 3/4 MIPS	4
	6	D316A-E3-E3	90° ELL. 3/4 C	1
	7	D320F-E1D1E1	TEE 3/4 FIPS x 1/2 FIPS x 3/4 FIPS	2
	8	D322F-D2-B1	HEX RED. 1/2 MIPS x 1/4 FIPS	2
	9	D329-5	DRAIN VALVE 1/4 IPS	1
	10	982-49	BRACKET	1
	11	D316F-E1-E2	90° ST. ELL. 3/4 IPS	2
	12	D320F-E1E1D1	TEE 3/4 FIPS x 3/4 FIPS x 1/2 FIPS	2
	13	D322F-D2-A1	HEX. RED. 1/2 MIPS x 1/8 FIPS	1
	14	D2497	PETCOCK 1/4 IPS	1
	15	SK-1433	PRESSURE GAUGE 1/4 IPS	1
	16	D2943	RINSE SOLENOID VALVE, 3/4 IPS	1
	17	D316A-E3-E2	90° ST. ELL 3/4 C X 3/4 MIPS	1
	18	D2243	VACUUM BREAKER 3/4 IPS	1
	19	D318A-E3-E3	ST. UNION 3/4 C	1
*	20	D2390-SP	SPLIT JAM NUT	2
	21	D314F-ES-20	NIPPLE 3/4 IPS X 2 1/2 LG.	1
*	22	D326F-E1	LOCK NUT 3/4 IPS	1
	23	D207A-B6-22	COPPER TUBING 3/4 CTS x 5 1/2" LG.	1
	24	D207A-B6-24	COPPER TUBING 3/4 CTS x 6" LG.	1
	25	D207A-B6-41	COPPER TUBING 3/4 CTS x 10 1/4" LG.	1
	26	D207A-B6-30	COPPER TUBING 3/4 CTS x 7 1/2" LG.	1
(R.H.)	27	D207A-B6-98	COPPER TUBING 3/4 CTS X 24" LG.	1
(L.H.)		D207A-B6-21	COPPER TUBING 3/4 CTS x 5 1/4" LG.	1
	28	D207A-B6-42	COPPER TUBING 3/4 CTS x 10 1/2" LG.	1
	29	D316F-E3-E1	90° ST. ELL 3/4 C X 3/4 FIPS	1
*	30	D2390-SP-1	BRASS UNION FOR SPLIT JAM NUT	2
	31	D740	SPACER	1

REV	ECN NO	DATE
E	2006	3.2.04
D	1385	2.21.96
C	1158	3.29.95

FILE: PARTS\957-51

TOLERANCES
FRACTIONS ±1/64
DECIMALS
.XXX ± .005
.XX ± .01
ANGLES ±1/2°
UNLESS OTHERWISE SPECIFIED

TITLE: HATCO 9 & 18 KW ELECT BOOSTER ASSEMBLY

MAT'L: –

NEXT ASSY: –
REQ'D: 1
SCALE: 1=8
DWG. NO.: 967-51
USED ON: 45SA5
DRWN/DATE: RFN 1.11.92

Insinger
Philadelphia, PA 19135
(215) 624-4800
FAX (215) 624-6986

Fig. 7-7

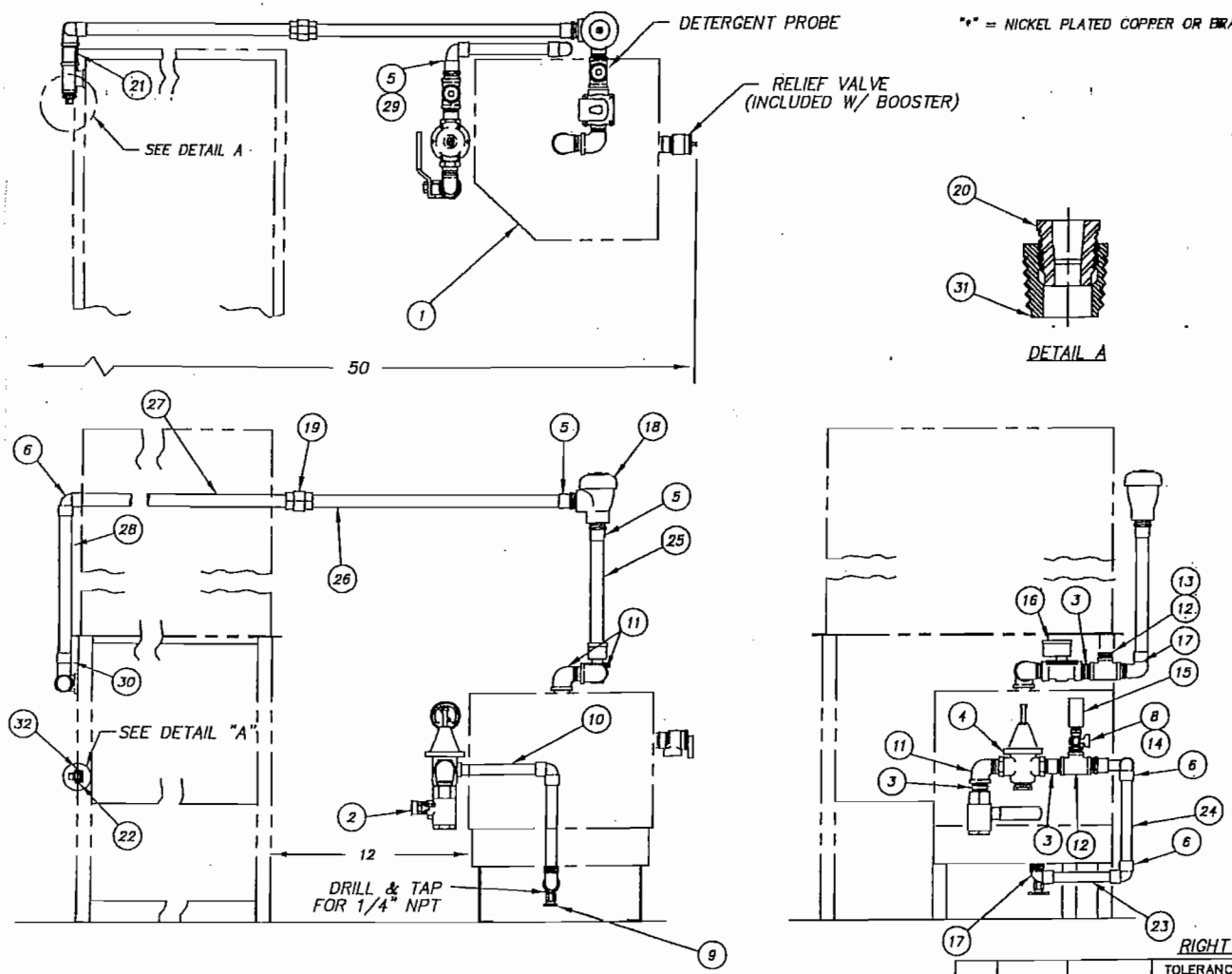

RIGHT SIDE MOUNTING SHOWN – LEFT SIDE MOUNTING OPPOSITE

ITEM	PART NO.	DESCRIPTION	QTY.
1	PER SPEC.	ELECTRIC BOOSTER	1
2	D2954	BALL VALVE 3/4 IPS	1
3	D314F-EC-00	CLOSE NIPPLE 3/4 IPS	3
4	D2508	PRESS. REG. & STRAINER 3/4 IPS	1
5	D317A-E2-E3	ADAPTER 3/4 MIPS x 3/4 C	3
6	D316A-E3-E3	90° ELL 3/4 C	3
7	–	–	–
8	D322F-B1-D2	HEX RED. 1/2 MIPS x 1/4 FIPS	1
9	D329-5	DRAIN VALVE 1/4 IPS	1
10	D207A-B6-23	COPPER TUBING 3/4 CTS x 5 3/4 LG.	1
11	D316F-E1-E2	90° ST. ELL 3/4 IPS	3
12	D320F-E1E1D1	TEE 3/4 FIPS x 3/4 FIPS x 1/2 FIPS	2
13	D322F-A1-D2	HEX. RED. 1/2 MIPS x 1/8 FIPS	1
14	D2497	PETCOCK 1/4 IPS	1
15	SK-1433	PRESSURE GAUGE 1/4 IPS	1
16	D2943	RINSE SOLENOID VALVE, 3/4 IPS	1
17	D316A-E2-E3	90° ST. ELL 3/4 MIPS x 3/4 C	2
18	D2244	VACUUM BREAKER 3/4 IPS	1
19	D318A-E3-E3	ST. UNION 3/4 C	1
* 20	D2390-SP	SPLIT JAM NUT	2
21	D314F-ES-20	NIPPLE 3/4 IPS X 2 1/2 LG.	1
* 22	D326F-E1	LOCK NUT 3/4 IPS	1
23	D207A-B6-19	COPPER TUBING 3/4 CTS x 4 3/4 LG.	1
24	D207A-B6-27	COPPER TUBING 3/4 CTS x 6 3/4 LG.	1
25	D207A-B6-35	COPPER TUBING 3/4 CTS x 8 3/4 LG.	1
26	D207A-B6-58	COPPER TUBING 3/4 CTS x 14 1/2 LG.	1
(R.H.) 27	D207A-B6-96	COPPER TUBING 3/4 CTS X 24 LG.	1
(L.H.)	D207A-B6-21	COPPER TUBING 3/4 CTS x 5 1/4 LG.	1
28	D207A-B6-42	COPPER TUBING 3/4 CTS x 10 1/2 LG.	1
29	D316A-E2-E3	90° ST. ELL 3/4 C	1
30	D316F-E3-E1	90° ST. ELL 3/4 C X 3/4 FIPS	1
* 31	D2390-SP-1	BRASS UNION FOR SPLIT JAM NUT	2
32	D740	SPACER	1

REV	ECN NO	DATE
C	2006	3.2.04
B	1385	2.26.96
A	1158	3.29.95

FILE: PARTS\967-84

TOLERANCES: FRACTIONS ±1/64, DECIMALS .XXX ± .005, .XX ± .01, ANGLES ±1/2° UNLESS OTHERWISE SPECIFIED

TITLE: ELECTRIC BOOSTER ASSY (HATCO 11.4 KW)

NEXT ASSY: –

REQ'D: 1

DWG. NO.: 967-84

MAT'L: –

SCALE: 1=8

USED ON: 45SA5

Insinger

Philadelphia, PA 19135
(215) 624-4800
FAX (215) 624-6986

DRWN/DATE: RFN 1.11.92

Fig. 7-8

ITEM	DESCRIPTION	PART NO.	QTY
27	SWITCH (AUTO – MANUAL)	DE5–11	1
28	BOOT	DE9–13	2
29	GROUNDING STUD, 1/4–20	D309C–GC–4G	1
30	LOCKWASHER, 1/4	D313C–G5	1
31	HEX NUT, 1/4–20	D312C–GC–2	1
32	CONTROL BOX		1
	ENSIGN 40–2	979–23	
	45SA5	DE9–37	
33	DATA DECAL		1
	ENSIGN 40–2	SK–3715	
	45SA5	SK–3917	

ITEM	DESCRIPTION	PART NO.	QTY
18	TIMER (LIQUID LEVEL)	DE7–35	1
19	OVERLOAD BASE	DE2–60	1
20	TERMINAL BLOCK ASSY	DE3–3	1
21	LEGEND DECAL	SK–2306	1
22	SWITCH, (POWER ON) 45SA5	DE5–8	1
	SWITCH, DPDT (POWER ON) ENSIGN 40–2	DE5–11	1
23	PILOT LIGHT (RED)	DE9–107	1
24	PILOT LIGHT (WHITE)	DE9–108	1
25	PILOT LIGHT (AMBER)	DE9–109	1
26	CIRCUIT BREAKER (5A)	DE9–43	1

ITEM	DESCRIPTION		PART NO.	QTY
1	COMPONENT MOUNTING PLATE		SK–3828	1
2	TRANSFORMER (100 VA, 24 VAC)			1
	ALL VOLTAGES EXCEPT 120 V		DE6–6	
	120 V		DE6–14	
3	FUSE BLOCK KIT (100 VA XFMR)			1
	FOR DE6–6		DE9–163	
	FOR DE6–14		DE9–191	
4	FUSE (100 VA TRANSFORMER PRIMARY)			2
	440 – 480 V	FNQ–R–.75	DE9–166	
	380 V	FNQ–R–.75	DE9–166	
	220 – 230 V	FNQ–R–1.4	DE9–168	
	208 V	FNQ–R–1.5	DE9–200	
	115 V	FNQ–R–2.8	DE9–201	
5	OVERLOAD RELAY (1/2 HP PUMP)			1
	460/3/60	1–1.6 A	DE2–50	
	380/3/50	1–1.6 A	DE2–50	
	230/3/60	1.6–2.5 A	DE2–52	
	220/3/50	1.6–2.5 A	DE2–52	
	220/1/60	4–6 A	DE2–54	
	208/3/60	1.6–2.5 A	DE2–52	
	115/1/60	7–10 A	DE2–56	
6	CONTACTOR (PUMP)	30 A RES	DE1–109	1
7	CONTACTOR (ELECT TANK HEAT)	30 A RES	DE1–109	1
8	TIME DELAY BOARD (WASH & RINSE)		DE7–27	2
9	RELAY BASE		DE2–37	2
10	RELAY		DE2–38	2
11	RELAY HOLD DOWN SPRING		DE3–43	2
12	DIN RAIL (35 mm)		DE9–84	1
13	DIN RAIL (15 mm)		DE3–42	1
14	TERMINAL SECTION		DE3–39	AR
15	TERMINAL END COVER PLATE		DE3–40	1
16	TERMINAL END CLAMP		DE3–41	2
17	TEMPERATURE CONTROL BOARD		DE9–251	1

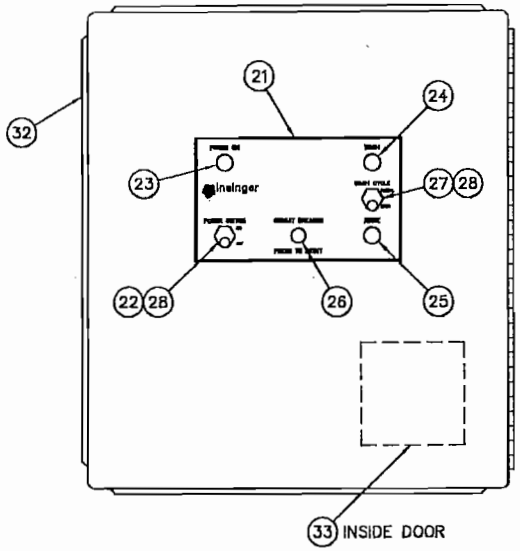

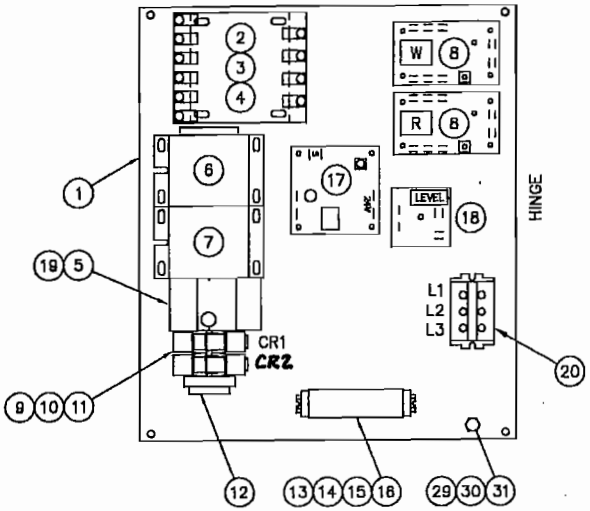

NOT SHOWN

ELECTRIC IMMERSION HEATER (1.5 KW)		1
440–480 V, 3 PH	DE13–SB73	
380 V, 3 PH	DE13–SB53	
220–240 V, 3 PH	DE13–SB43	
208V, 3PH	DE13–SB23	
220–240 V, 1 PH	DE13–SB41	
208V, 1 PH	DE13–SB21	
110–120 V, 1 PH (5KW 208 DERATED)	DE13–SD21	
TEMPERATURE SENSOR	DE9–252	1
START PUSHBUTTON STATION	DE5–76	1

TITLE	ENSIGN 40–2 & 45SA5 CONTROL PANEL LAYOUT			
Insinger	Philadelphia, PA 19135 (215) 624–4800 FAX (215) 624–6966		DRWN/DATE MFJ	12.1.95
M	2006	3.2.04	FILE: SKETCH\SK–3574	
L	1945	7.17.02	SCALE 1/4	DWG. NO. SK–3574
K	1857	2.15.01		
REV	ECN NO	DATE		

Fig. 7-9

CHAPTER 8

INSTALLATION

WARNING

All portions of the installation must comply with applicable Navy shipboard regulations, specifications, and requirements.

8.1 UNPACKING

The 45SA5 dishwasher is shipped from the factory securely bolted to a single shipping pallet.

8.1.1 Carefully remove all external protective crating.

8.1.2 Remove all fasteners holding the dishwasher and component parts to the pallet.

8.1.3 Check that the following items have been received:

Qty.	Description
1	Dishwasher.
1	Electrical Control Enclosure
1	Booster heater (electric or steam).
1	Thermometer bracket with thermometers.
2	Plate racks.
2	Cup, bowl and cutlery racks.
2	Manifold cleanout brushes.
2	Technical manuals.

8.2 INSTALLATION

8.2.1 Mechanical and Piping.

8.2.1.1 The dishwasher (with booster heater) is designed for installation under a dresser table. Position the dishwasher and booster heater underneath the table and install deck plates per standard procedures.

WARNING

Both the dishwasher and the booster heater must be securely bolted to deck plates.

8.2.1.2 Bolt the legs of the dishwasher and booster heater to the deck plates.

8.2.1.3 Connect a 3/4" hot water supply line (140° F. minimum) to the valve on the water inlet to the booster heater. Inlet water pressure should not be less than 20 psig. with water flowing, nor more than 125 psig static. Use unions in the piping system to facilitate the replacement of individual components.

8.2.1.4 Connect a 1-1/4" drain line to the drain coupling on the bottom of the wash tank.

8.2.1.5 For 45SA5-F1 (steam heated) machines, make the following connections:

1. 1/2" supply line to valve to wash tank steam inlet.
2. 3/4" supply line to valve to booster steam inlet.
3. 3/8" condensate return line to the wash tank trap.
4. 3/8" condensate return line to the booster trap.

8.2.1.6 Install the thermometer bracket (with wash and rinse thermometers) in an easily observed location. Insert the capillary bulbs in the rinse pipe fitting and wash tank wall fitting, and secure with split hex nuts. Neatly coil any unused capillary length.

8.2.1.7 Install the detergent dispenser and rinse injector systems in an easily accessible location, above the level of the wash tank. See figure 8-6 for an example.

A fresh water feed tube may be connected from the dishwasher hot water piping to the water inlet of the detergent controller. As required, make connections between the detergent controller and detergent reservoir. Any detergent discharge tubing should enter the machine at an elevation above the wash tank.

Connect a feed tube from the rinse injector pump to the tee on the final hot rinse piping.

8.2.2 Electrical.

WARNING

Dangerous voltages are present on connections to the electrical control enclosure and electric booster heater. Observe normal safety precautions for high voltage electrical equipment when connecting to the local distribution system. All work should be done by a qualified electrician.

NOTE

Mounting hardware for the electrical control enclosure and the electrical power cables from the electrical control enclosure and electric booster heater to the ship's local distribution panel are to be furnished by the installing activity.

8.2.2.1 Install the electrical control enclosure on a bulkhead adjacent to the dishwasher. Controls should be easily accessible by the operator.

8.2.2.2 Install the 440 volt power wires between a circuit breaker in the ship's local distribution panel and the dishwasher electrical control enclosure.

NOTE

Power requirements for the dishwasher and booster heaters are listed in Table 1-1.

8.2.2.3 For electric booster heaters only, install separate 440 volt power wires between a circuit breaker in the ship's local distribution panel and the 440 volt connections inside the booster main cover panel.

8.2.2.4 Install the power and control wires between the electrical control enclosure and the junction box on the dishwasher. Numbered terminals are provided in each enclosure for all wires. See Figure 8-5.

8.2.2.5 Connect the detergent dispenser controller to an appropriate source of power. 24 vac terminals (1 amp max) are available in the electrical control enclosure for dispensers operating on 24 vac. Figure 8-6 identifies these terminals. Voltage is present when the wash pump operates. Also connect the probe (on the bottom of the wash tank) to the controller.

8.2.2.6 Connect the rinse injector to an appropriate source of power. Continuously powered 24 vac terminals (1 amp max) are available in the electrical control enclosure for injectors operating on 24 vac. Figure 8-6 identifies these terminals.

8.2.3 Check-Out of the Installation.

8.2.3.1 Perform the Start-up Procedure, section 2.3.

WARNING

At startup, and after any draining of the electric booster, turn off the 440 volt power to the booster during the initial wash tank fill (2.3.6). This will allow the booster reservoir to fill and trapped air to be purged without overheating of booster heating elements.

8.2.3.2 Verify that pump rotation is correct. An arrow on the pump casting indicates the correct direction.

8.2.3.3 Inspect all plumbing joints for leakage and verify that water is running freely through the drain.

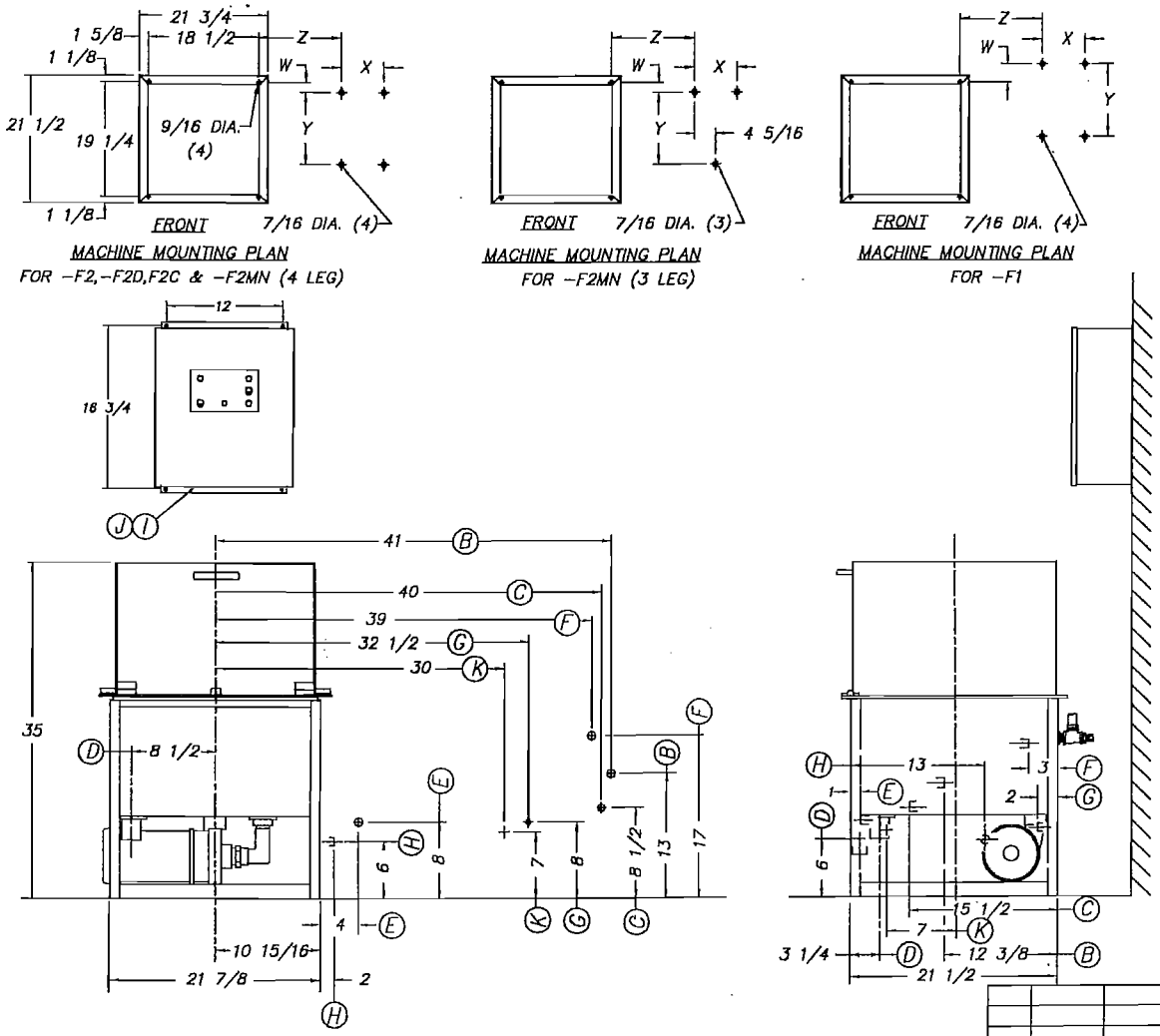

INSTALLATION CONNECTIONS		
LTR	DESCRIPTION	SIZE
B	HOT WATER TO STEAM BOOSTER - 140° F	3/4 FIPS
C	HOT WATER TO ELEC. BOOSTER - 140° F	3/4 FIPS
D	DRAIN CONNECTION	1 1/4 FIPS
E	STEAM TO TANK COIL	1/2 FIPS
F	STEAM TO STEAM BOOSTER HEATER	3/4 FIPS
G	CONDENSATE RETURN - BOOSTER HEATER	3/8 FIPS
H	CONDENSATE RETURN - STEAM TANK COIL	3/8 FIPS
I	ELECTRICAL CONNECTION - PUMP MOTOR	1/2 HP
J	ELECTRICAL CONNECTION - WASH HEATER	1 1/2 KW
K	ELECTRICAL CONNECTION-BOOSTER (-F2)	9 KW
	ELECTRICAL CONNECTION-BOOSTER (-F2C)	9 KW
	ELECTRICAL CONNECTION-BOOSTER (-F2D)	18 KW
	ELECTRICAL CONNECTION-BOOSTER (-F2MN)	11.4 KW

DIM. LTR.	45SA5-F1 STEAM HEAT	45SA5-F2 45SA5-F2D ELEC. HEAT	45SA5-F2C ELEC. HEAT	45SA5-F2MN (4 LEG) ELEC. HEAT	45SA5-F2MN (3' LEG) ELEC. HEAT
W	6"	2 5/8"	2 5/8"	3 1/4"	2 1/4"
X	9 3/4"	9 3/4"	12"	12 1/2"	8 5/8"
Y	15 3/4"	12"	14"	4 1/2"	9 1/8"
Z	18 5/8"	17"	17"	13"	15"

RIGHT SIDE (STANDARD) BOOSTER MOUNTING SHOWN

NOTES:

1. WASH TANK IS FILLED THRU THE FINAL RINSE LINE.

REV	ECN NO	DATE
D	2006	3.2.04

FILE: STD\45SA5

TOLERANCES: FRACTIONS ±1/64, DECIMALS .XXX ± .005, .XX ± .01, ANGLES ±1/2° UNLESS OTHERWISE SPECIFIED

TITLE: 45SA5 UNDERCOUNTER DISHWASHER

NEXT ASSY: -
REQ'D: -
MAT'L: -
SCALE: 1=12
DWG. NO.: 45SA5-RS
USED ON: -

Insinger
Philadelphia, PA 19135
(215) 624-4800
FAX (215) 624-6966

DRWN/DATE: MAM 5.11.93

Fig. 8-1

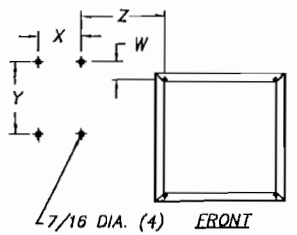

MACHINE MOUNTING PLAN
FOR –F1

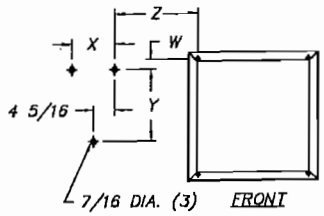

MACHINE MOUNTING PLAN
FOR –F2MN (3 LEG)

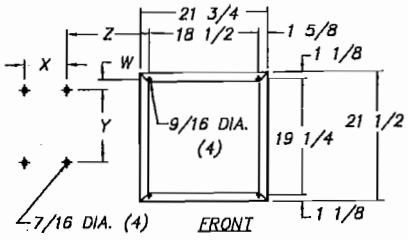

MACHINE MOUNTING PLAN
FOR –F2,–F2D,F2C & –F2MN (4 LEG)

INSTALLATION CONNECTIONS		
LTR	DESCRIPTION	SIZE
B	HOT WATER TO STEAM BOOSTER – 140° F	3/4 FIPS
C	HOT WATER TO ELEC. BOOSTER – 140° F	3/4 FIPS
D	DRAIN CONNECTION	1 1/4 FIPS
E	STEAM TO TANK COIL	1/2 FIPS
F	STEAM TO STEAM BOOSTER HEATER	3/4 FIPS
G	CONDENSATE RETURN – BOOSTER HEATER	3/8 FIPS
H	CONDENSATE RETURN – STEAM TANK COIL	3/8 FIPS
I	ELECTRICAL CONNECTION – PUMP MOTOR	1/2 HP
J	ELECTRICAL CONNECTION – WASH HEATER	1 1/2 KW
K	ELECTRICAL CONNECTION–BOOSTER (–F2)	9 KW
	ELECTRICAL CONNECTION–BOOSTER (–F2C)	9 KW
	ELECTRICAL CONNECTION–BOOSTER (–F2D)	18 KW
	ELECTRICAL CONNECTION–BOOSTER (–F2MN)	11.4 KW

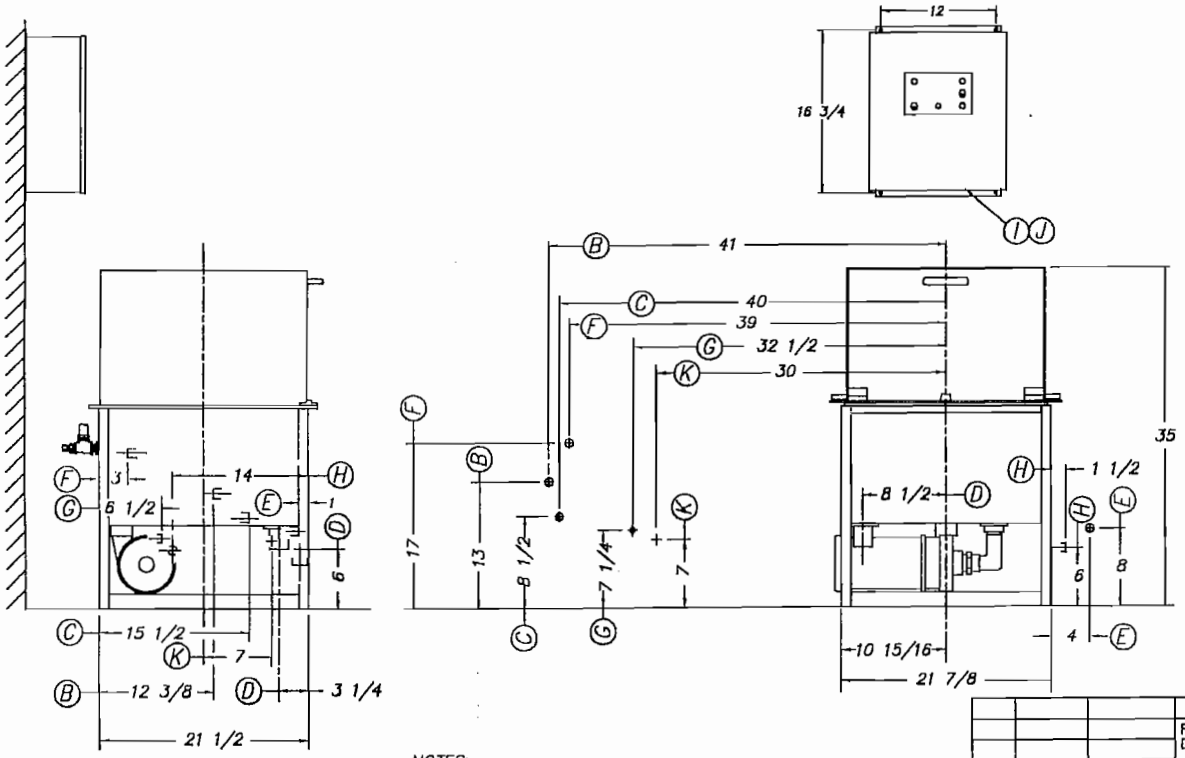

DIM. LTR.	45SA5–F1 STEAM HEAT	45SA5–F2 45SA5–F2D ELEC. HEAT	45SA5–F2C ELEC. HEAT	45SA5–F2MN (4 LEG) ELEC. HEAT	45SA5–F2MN (3 LEG) ELEC. HEAT
W	6"	2 5/8"	2 5/8"	3 1/4"	2 1/4"
X	9 3/4"	9 3/4"	12"	12 1/2"	8 5/8"
Y	15 3/4"	12"	14"	4 1/2"	9 1/8"
Z	18 5/8"	17"	17"	13"	15"

LEFT SIDE (OPTIONAL) BOOSTER MOUNTING SHOWN

NOTES:

1. WASH TANK IS FILLED THRU THE FINAL RINSE LINE.

REV	ECN NO	DATE
D	2006	3.2.04

FILE: STD\45SA5

TOLERANCES
FRACTIONS ±1/64
DECIMALS
.XXX ± .005
.XX ± .01
ANGLES ±1/2°
UNLESS OTHERWISE SPECIFIED

TITLE 45SA5 UNDERCOUNTER DISHWASHER

NEXT ASSY –
REQ'D –
MAT'L –
SCALE 1=12
DWG. NO. 45SA5–LS
USED ON –
DRWN/DATE MAM 5.11.93

Insinger
Philadelphia, PA 19135
(215) 624–4800
FAX (215) 624–6966

Fig. 8-2

Fig. 8-3

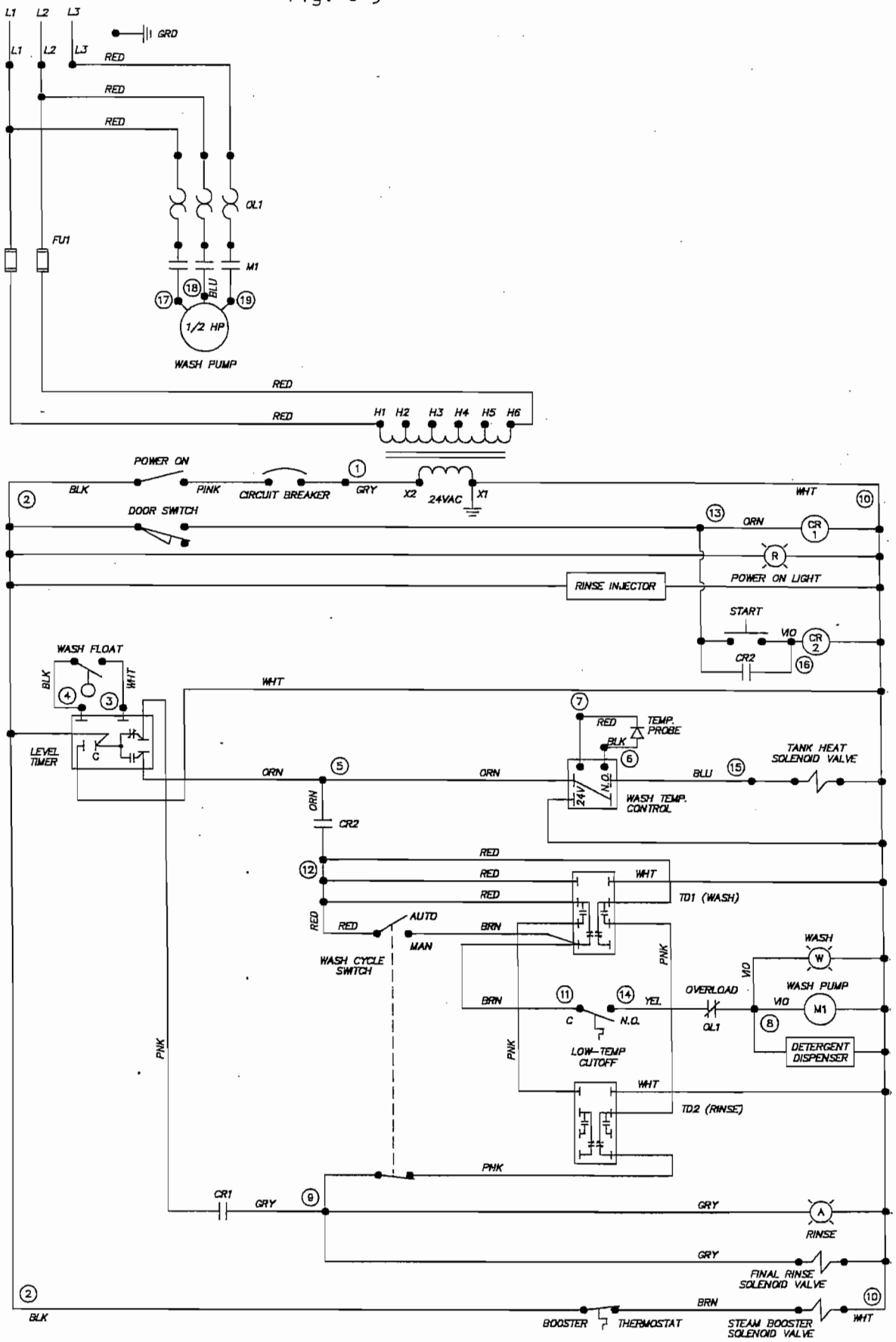

			TITLE	MODEL 45SA5-F1 STEAM HEAT	DWG. NO. W45SA010
F	2006	3.2.04	Insinger	Philadelphia, PA 19135 (215) 624-4800 FAX (215) 624-6966	DRWN/DATE MFJ 1.7.96
REV	ECN NO	DATE			
FILE: WIRE\W45SA010					

Fig. 8-4

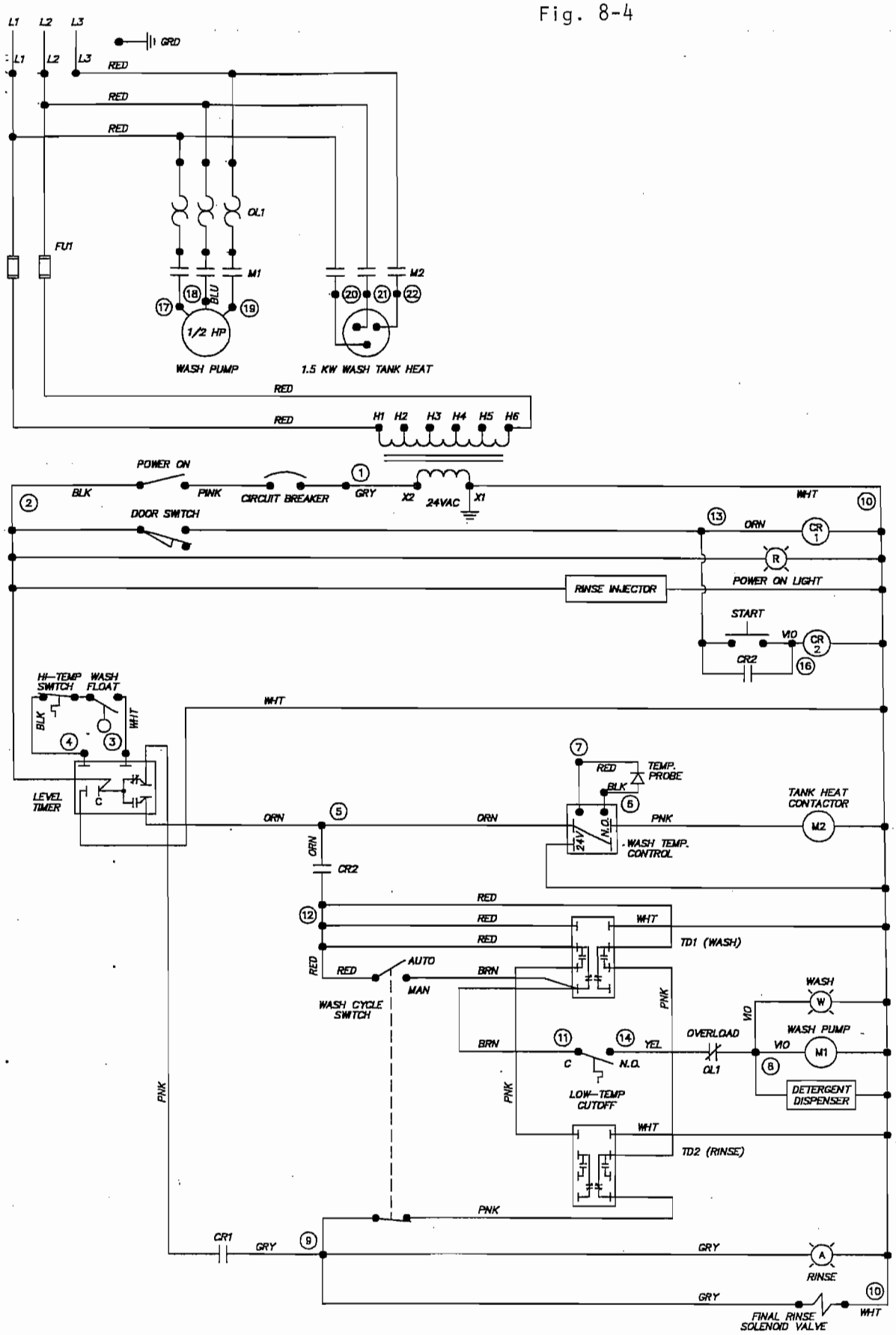

			TITLE	MODEL 45SA5-F2 ELECTRIC HEAT	DWG. NO. W45SA020
F	2006	3.2.04			
REV	ECN NO	DATE	Insinger	Philadelphia, PA 19135 (215) 624-4800 FAX (215) 624-6966	DRWN/DATE MFJ 1.7.96
FILE: WIRE\W45SA020					

FIGURE 8–5

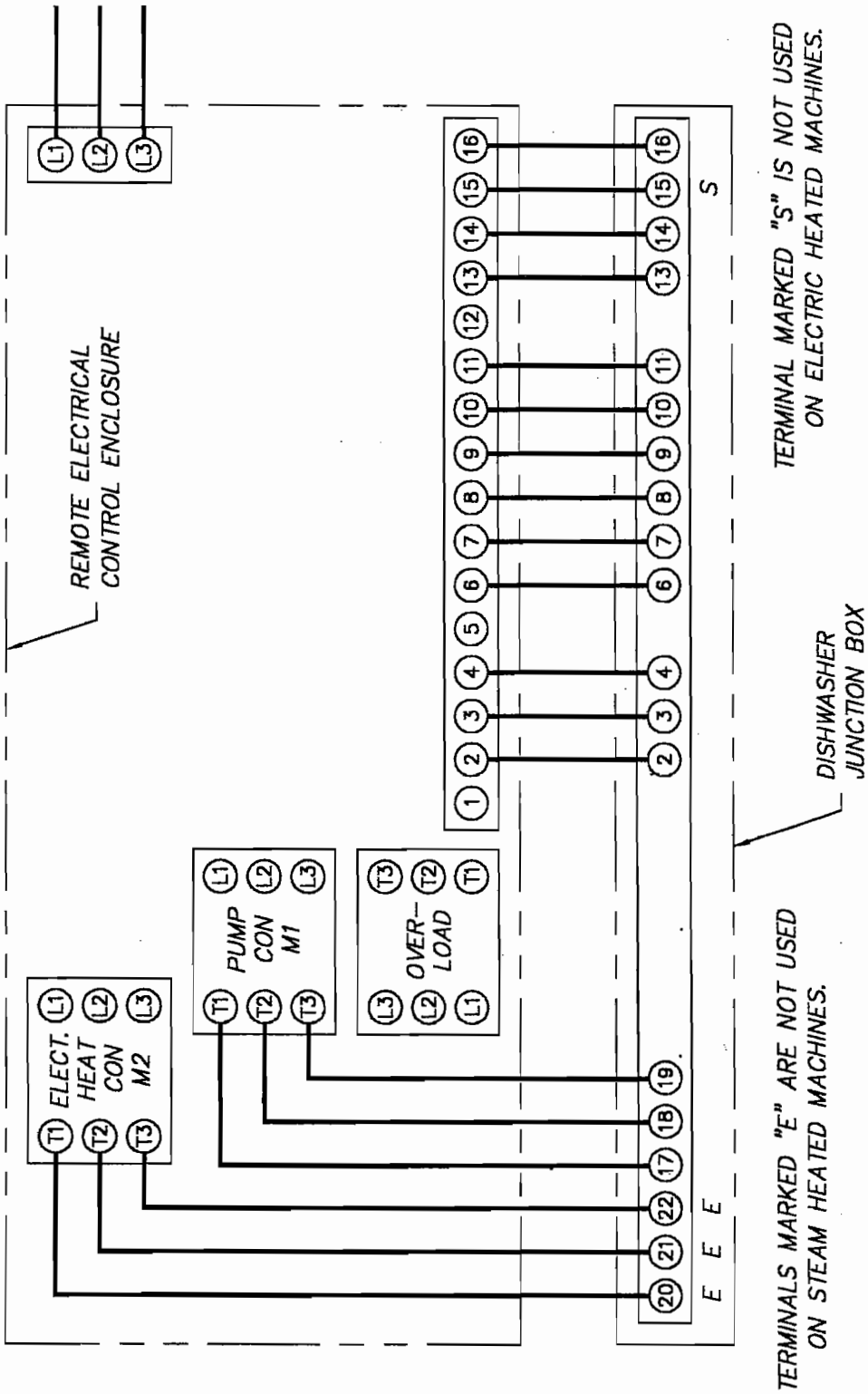

FIELD WIRING INTERCONNECTIONS

SKETCHA\SK–3832

FIGURE 8–6

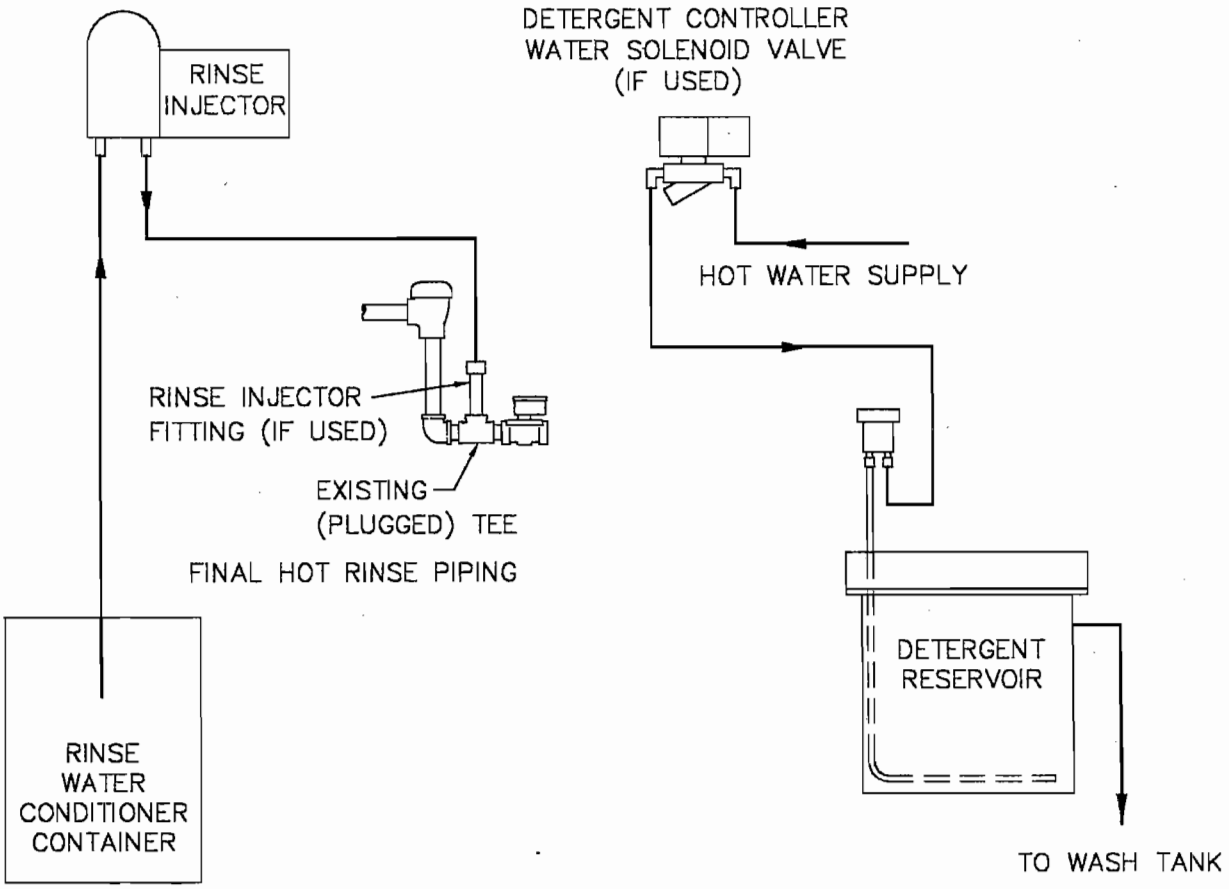

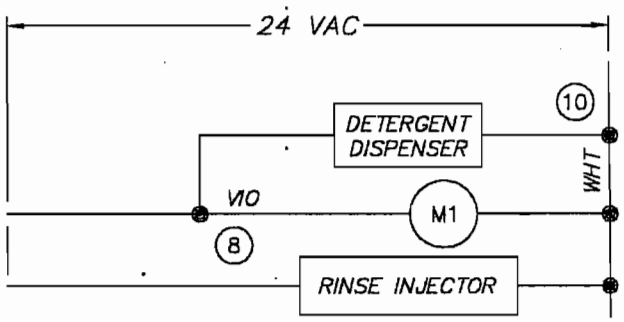

DETERGENT DISPENSER & RINSE INJECTOR CONNECTIONS
24 VAC ONLY
1 AMP MAX FOR DET DISP – 1 AMP MAX FOR RINSE INJ

DETERGENT DISPENSER AND RINSE INJECTOR CONNECTION EXAMPLES

SKETCHA\SK–3901

FIGURE 8-7

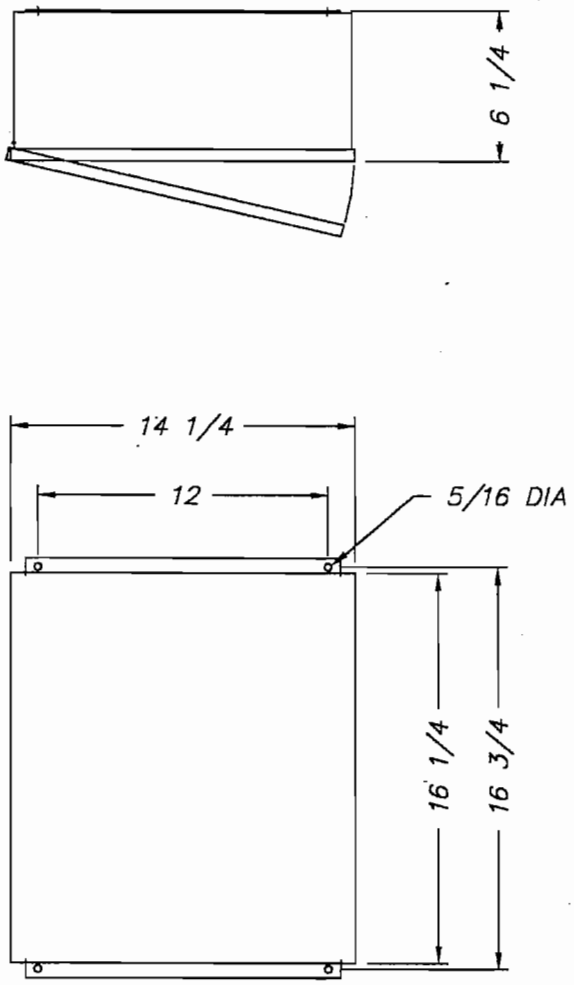

ELECTRICAL ENCLOSURE

SKETCHA\SK-4643

This page intentionally left blank.

Insinger

M